Engineering data (WIN 1491)		
DC bus voltage	48	V DC
Nominal AC voltage	30	V AC (rms)
Rated voltage	17	V AC (rms)
Rated power	336	W
Rated speed	3000	rpm
Rated torque	1.07	Nm
Rated current	15.21	A (rms)
Peak torque	4.48	Nm
Peak current	70.8	A (rms)
Stall torque	1.12	Nm
Stall current	15.4	A (rms)
No load speed	6790	rpm
EMF constant ±10%	4.4	V AC (rms) / 1000rpm
Theoretical torque constant ±10%	0.073	Nm / A (rms)
Torque constant ±10% @ rated load	0.070	Nm / A (rms)
Number of poles	6	
Electrical time constant	1.52	ms
Winding terminal resistance	0.198	Ω
Rotary field terminal inductance	0.3	mH

Customs info	
HS Code	85015100

Mechanical data (setting 29)		
Max mechanical speed	12000	rpm
Mech. time constant	0.71	ms
Thermal time constant	18	min
Rotor inertia	0.11	kgcm²
Protection	IP64	
Color	RAL 9005	
Cooling	Convection	

Sensors	
Temperature	PT1000 {PT1000}
Feedback	EQI1131 (EnDat 2.2) multi-turn, 19 + 12 bits

Torque / speed curve

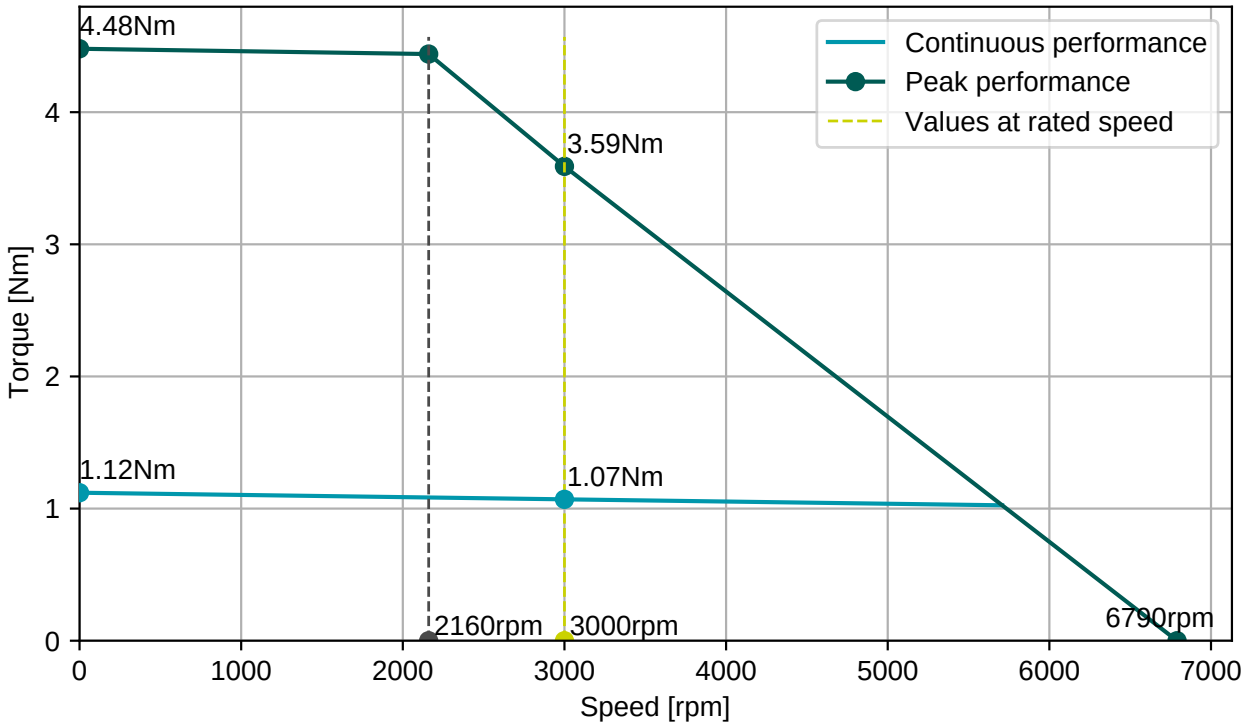

BGC110N00001216000
M23, 8 poles, rotary

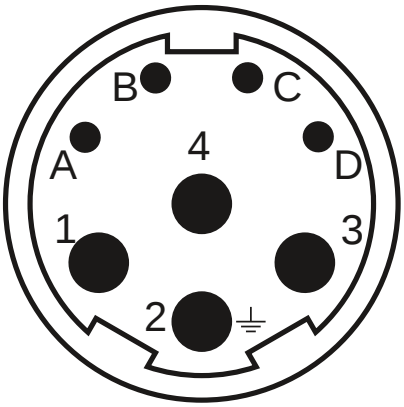

AGC052N00001215000
M23, 12 poles, rotary

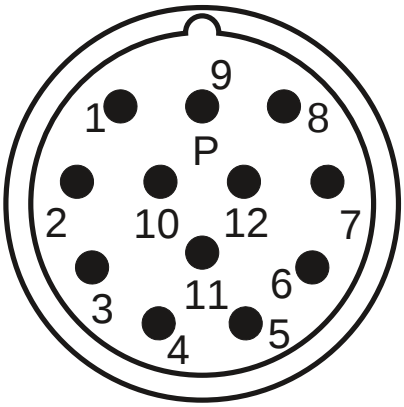

Connector 1 (9)	
1	U
4	V
3	W
2	PE
A	Brake+
B	Brake-
C	
D	

Connector 2 (293)	
1	Vcc (+5V)
2	GND
3	DATA
4	DATA-
5	CLOCK
6	CLOCK-
7	Therm+
8	Therm-
9	Vcc sensor
10	GND sensor

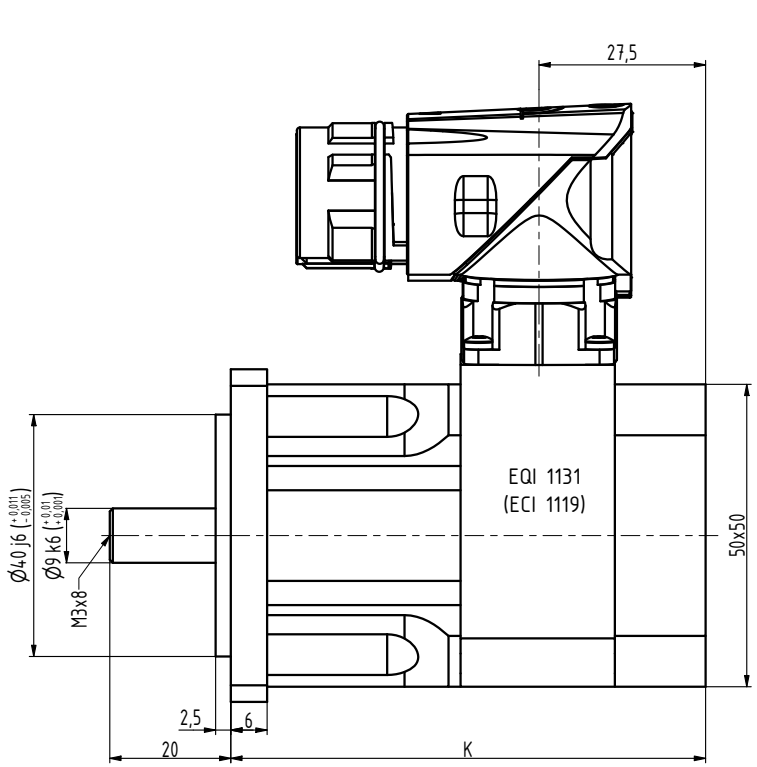

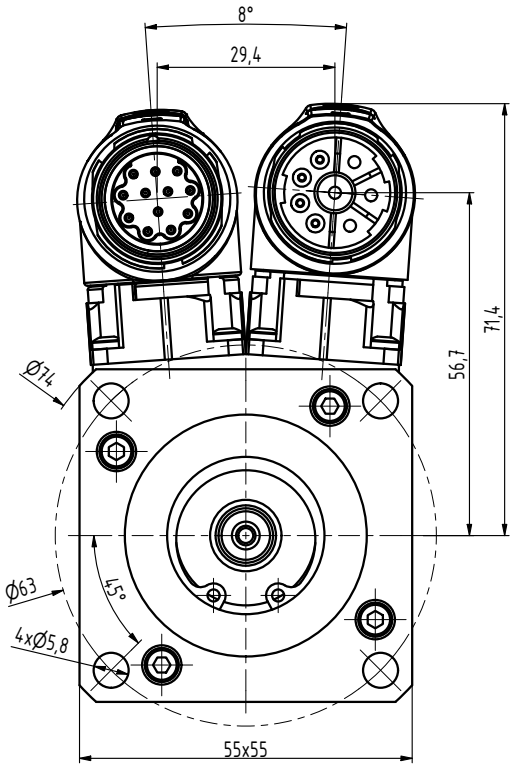

TYP	K
N2-0028	78,5
N2-0054	93,5
N2-0075	108,5
N2-0095	123,5
N2-0112	138,5

INDEX	ZMĚNA	DATUM	PODPIS		
ZN.MAT.			T.O.	HMOTNOST kg	MĚŘ.
ROZM.-POLOT.					
POM. ZAŘ.				ČSN	TŘ.Č.
VYPR. Šimík		NORM.REF.		POZN.	Č. KUSOVNÍKU
PŘEKR. Ošlejšek 4.2.22					
TECHNOL.		SCHVÁLIL Ošlejšek	22.01.2019	STARÝ V.	Č.V.
NÁZEV					
Motor N2				N2100 00 Z_S4_S1	
				Listů	List