Engineering data (WIN 1624)		
DC bus voltage	48	V DC
Nominal AC voltage	33	V AC (rms)
Rated voltage	25	V AC (rms)
Rated power	401	W
Rated speed	4500	rpm
Rated torque	0.85	Nm
Rated current	12.1	A (rms)
Peak torque	3.8	Nm
Peak current	59.6	A (rms)
Stall torque	0.95	Nm
Stall current	13	A (rms)
No load speed	7410	rpm
EMF constant ±10%	4.43	V AC (rms) / 1000rpm
Theoretical torque constant ±10%	0.073	Nm / A (rms)
Torque constant ±10% @ rated load	0.070	Nm / A (rms)
Number of poles	6	
Electrical time constant	1.43	ms
Winding terminal resistance	0.265	Ω
Rotary field terminal inductance	0.38	mH

Customs info	
HS Code	85015100

Mechanical data (setting 29)		
Max mechanical speed	12000	rpm
Mech. time constant	0.94	ms
Thermal time constant	18	min
Rotor inertia	0.11	kgcm²
Protection	IP64	
Color	RAL 9005	
Cooling	Convection	
Max. axial force 20kh	42	N
Max. radial force 20kh*	222	N
Max. axial force 100kh	25	N
Max. radial force 100kh*	130	N

** Defined for point of action at ½ output shaft length*

Sensors	
Temperature	PT1000 {PT1000}
Feedback	EQI1131 (EnDat 2.2) multi-turn, 19 + 12 bits

Torque / speed curve

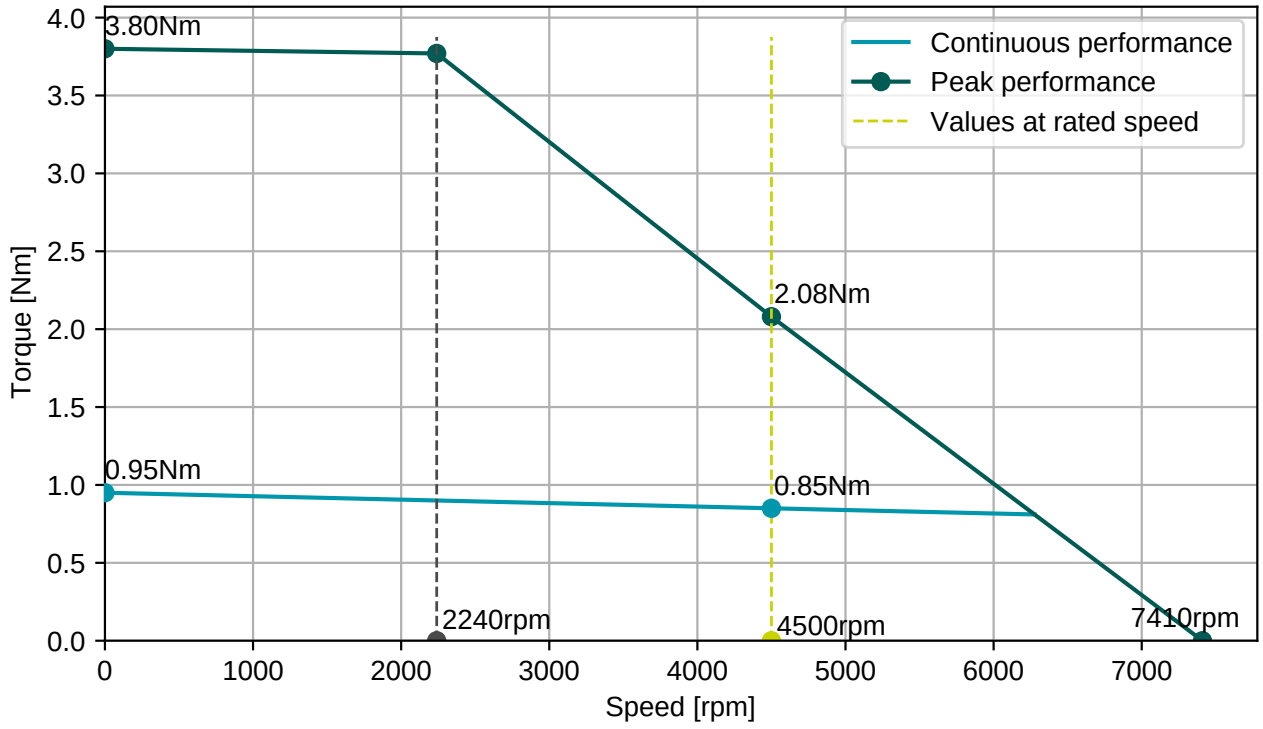

BGC110N00001216000
M23, 8 poles, rotary

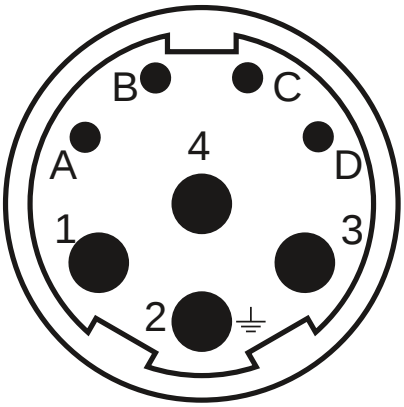

AGC052N00001215000
M23, 12 poles, rotary

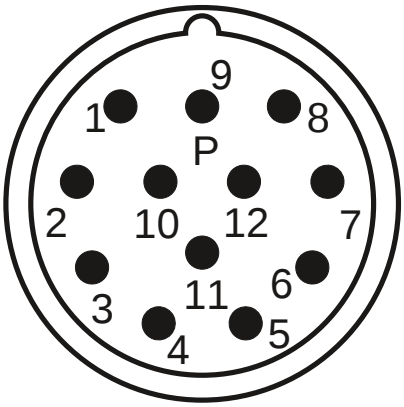

Connector 1 (9)	
1	U
4	V
3	W
2	PE
A	Brake+
B	Brake-
C	
D	

Connector 2 (293)	
1	Vcc (+5V)
2	GND
3	DATA
4	DATA-
5	CLOCK
6	CLOCK-
7	Therm+
8	Therm-
9	Vcc sensor
10	GND sensor

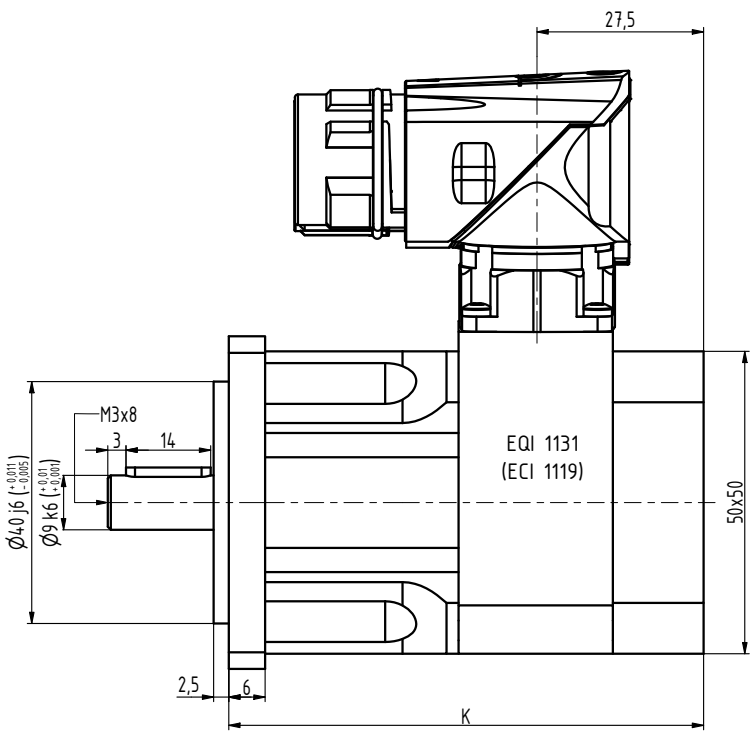

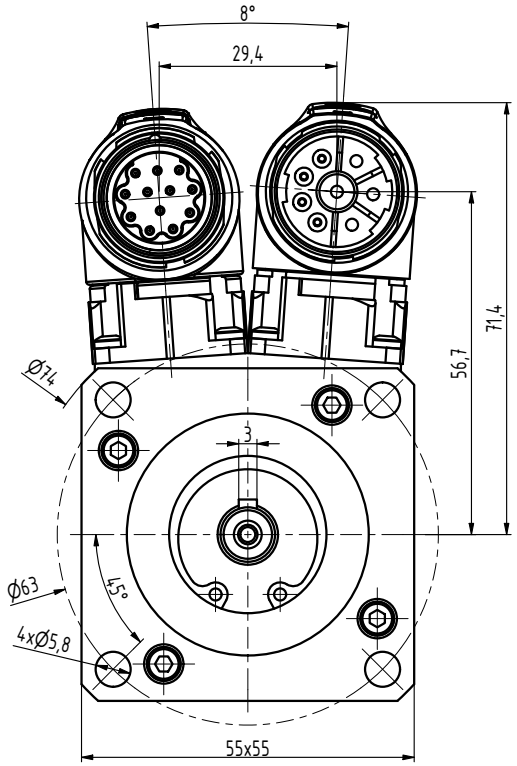

TYP	K
N2-0028	78,5
N2-0054	93,5
N2-0075	108,5
N2-0095	123,5
N2-0112	138,5

INDEX	ZMĚNA	DATUM	PODPIS		
ZN.MAT.			T.O.	HMOTNOST kg	MĚŘ.
ROZM.-POLOT.					
POM. ZAŘ.				ČSN	TŘ.Č.
VYPR. Šimík		NORM.REF.		POZN.	Č. KUSOVNÍKU
PŘEKR. Ošlejšek 4.2.22					
TECHNOL.		SCHVÁLIL Ošlejšek	22.01.2019	STARÝ V.	Č.V.
NÁZEV	Motor N2			N2100 00 P Z_S4_S1	
				Listů	List