Engineering motordata (WIN 807)		
DC bus voltage	320	V DC
Nominal AC voltage	220	V AC (rms)
Rated voltage	180	V AC (rms)
Rated power	1.2	kW
Rated speed	3000	rpm
Rated torque	3.70	Nm
Rated current	4.46	A (rms)
Peak torque	14.4	Nm
Peak current	17.3	A (rms)
Stall torque	4.8	Nm
Stall current	4.84	A (rms)
No load speed	3660	rpm
EMF constant ±10%	60	V AC (rms) / 1000rpm
Theoretical torque constant ±10%	0.99	Nm / A (rms)
Torque constant ±10% @ rated load	0.83	Nm / A (rms)
Number of poles	10	
Electrical time constant	3.00	ms
Winding terminal resistance	2.5	Ω
Rotary field terminal inductance	7.5	mH

Customs info	
HS Code	85015220

Mechanical motor data (setting 48)		
Max mechanical speed	12000	rpm
Mech. time constant	0.67	ms
Thermal time constant	30	min
Rotor inertia	1.52	kgcm²
Protection	IP65	
Color	RAL 9005	
Cooling	Convection	
Motor-only mass	3.8	kg
Max. axial force 20kh	75	N
Max. radial force 20kh*	392	N
Max. axial force 100kh	44	N
Max. radial force 100kh*	229	N

** Defined for point of action at ½ output shaft length*

Sensors	
Temperature	PT1000 {PT1000}
Feedback	ENM35 (HDSL) multi-turn, 24+12 bits

Gearbox engineering data		
Gear ratio	10	
Efficiency*	96	%
Torsional stiffness	8.8	Nm/arcmin
Number of stages	1	
Rated output torque	32	Nm
Cycling output torque	38	Nm
Max output torque	60	Nm
Emergency output torque	200	Nm
Rated input speed	4000	rpm
Max input speed	7000	rpm
Operating temperature	<-25; 90>	°C
Max. backlash	< 7	arcmin
Service life	20000	h

** at rated speed & torque*

Lubrication	
Type	Standard
Lubricant	Grease (lifetime lubrication)

Gearbox mechanical data		
Radial force for 20'000h*	2200	N
Axial force for 20'000h	3500	N
Output shaft design	Shaft key	
Mass	3	kg
Input inertia	0.371	kgcm²
Protection	IP54	

** Defined for point of action at ½ output shaft length*

Actuator data		
Rated speed	300	rpm
Rated torque	32.00	Nm
Cycling torque	38.00	Nm
Peak torque	60.00	Nm
Emergency stop torque	144.00	Nm
EMF constant ±10%	600.0	V AC (rms) / 1000rpm
Torque constant ±10% @ rated load	7.96	Nm / A (rms)
Total mass	6.80	kg
Output inertia	189.1	kgcm²

Torque / speed curve

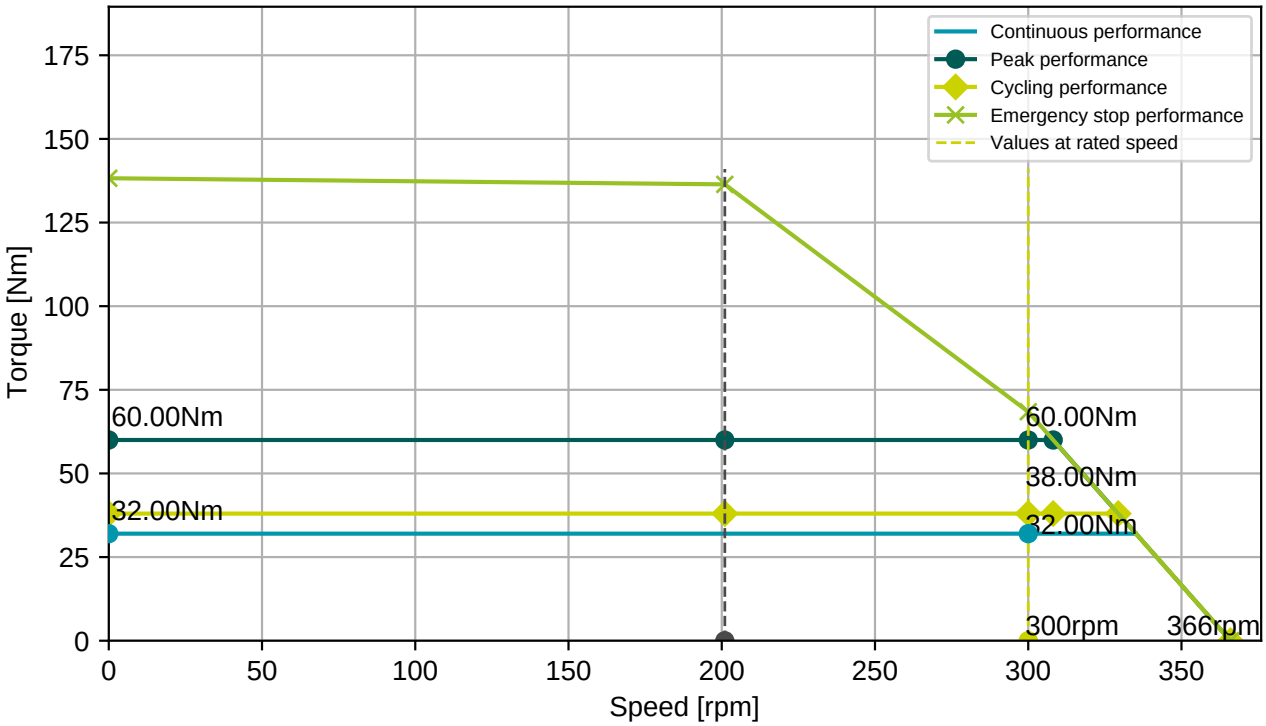

BFC110N00000207000

M23, 8 poles, rectangular

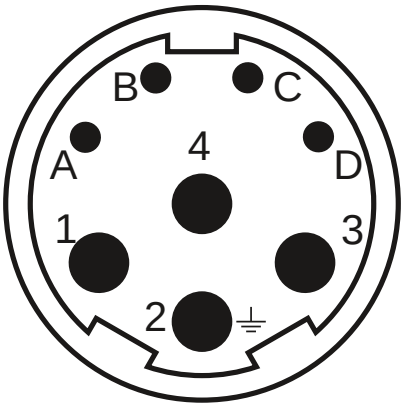

Connector 1 (283)	
1	U
4	V
3	W
2	PE
A	Brake+
B	Brake-
C	GND/DSL-
D	+Us/DSL+

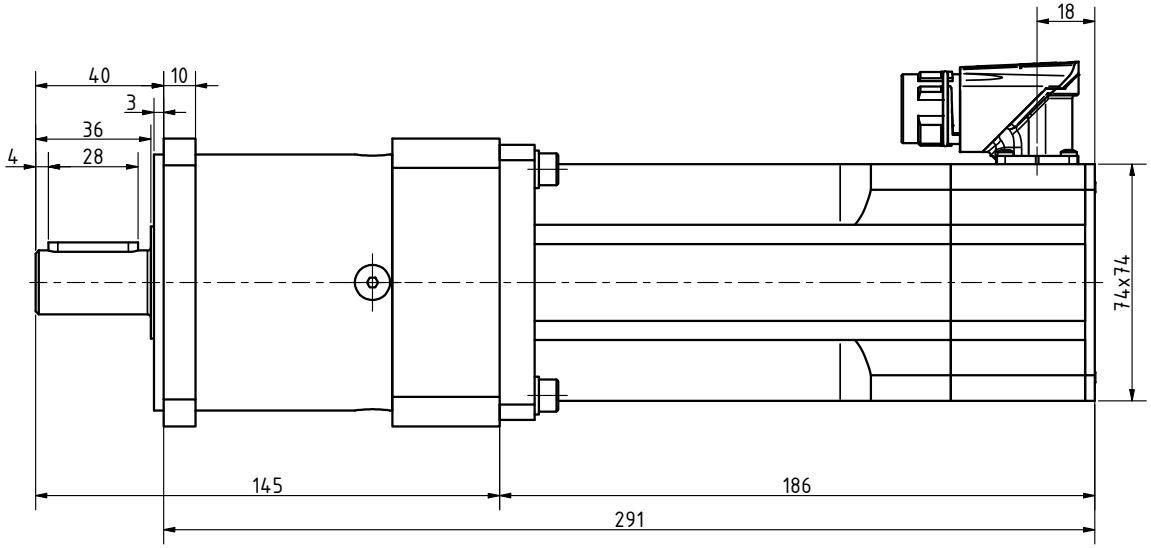

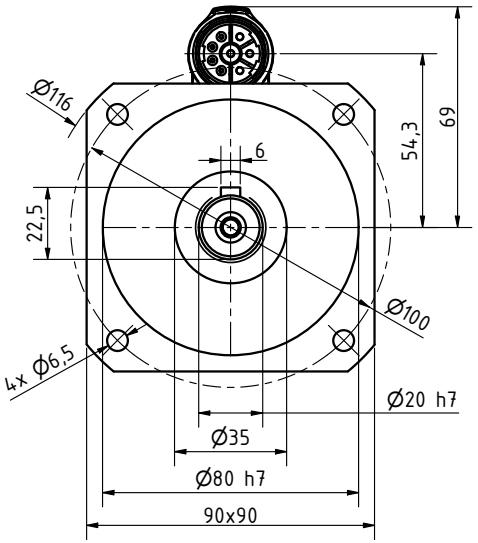

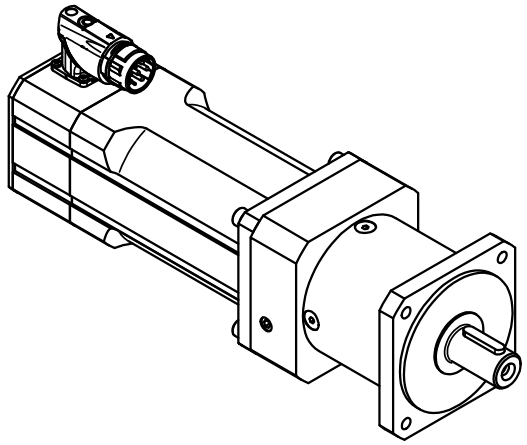

Bill of material			
Part Name	Quantity	Type	Tools
Screw - DIN 912/A4-70/M6x25	4	A4-70	imbus-M6
Washer - DIN 128A/A4 M6	4	A4	

Drawen:		Created: 05.11.2026	Modified:
Checked/approved by:		PROJECT NAME:	
Material			
Semiprod.		NUMBER - TITLE: SGQ080-010-P-0480-30-320/T5VS1-ENM	
Project ID's			
UNLESS OTHERWISE SPECIFIED DIMENSIONS ARE IN MM ANGLES ±X.XX° or ±X.XXX, 2 PL ±X.XX, 3PL ±X.XXX		SIZE A3 / QUANTITY:	REVISION:
		SCALE: 5:7 / WEIGHT:	SHEET: 1/1

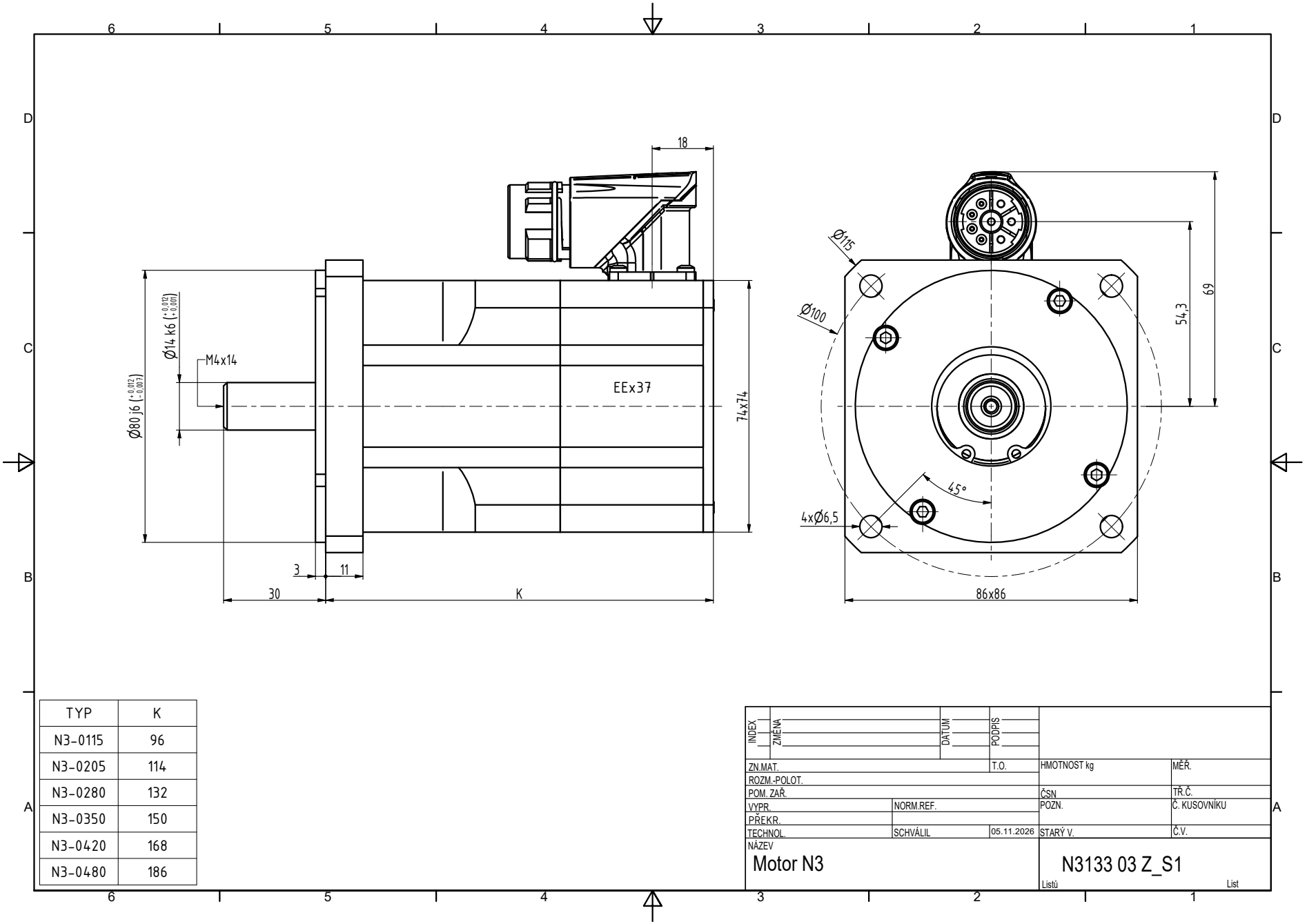

TYP	K
N3-0115	96
N3-0205	114
N3-0280	132
N3-0350	150
N3-0420	168
N3-0480	186

INDEX	ZMĚNA	DATUM	PODPIS		
ZN.MAT.			T.O.	HMOTNOST kg	MĚŘ.
ROZM.-POLOT.					
POM. ZAŘ.				ČSN	TŘ.Č.
VYPR.		NORM.REF.		POZN.	Č. KUSOVNÍKU
PŘEKR.					
TECHNOL.		SCHVÁLIL	05.11.2026	STARÝ V.	Č.V.
NÁZEV	Motor N3			N3133 03 Z_S1	
				Listů	List

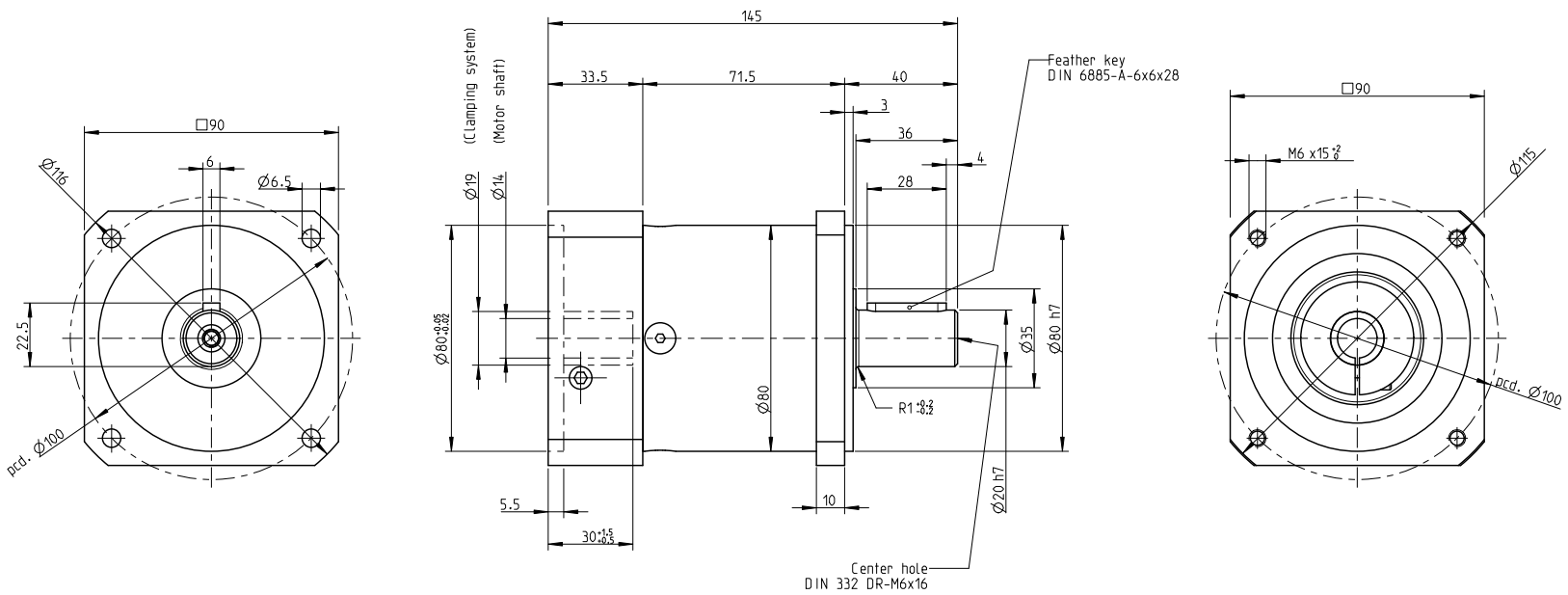

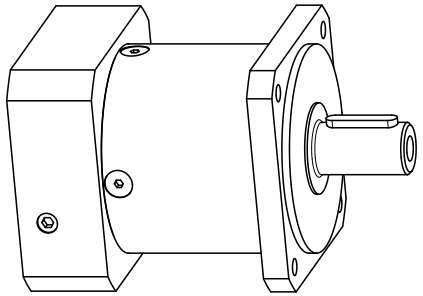

INDEX	ZMĚNA	DATUM	PODPIS	
ZM.MAT.		T.O.	HMOTNOST kg	MĚŘ.
ROZM.-POLOT.				
ROZM. ZAŘ.			ČSN	TŘ.Č.
VYPR.	NORM. REF.		POZN.	Č. KUSOVNÍKU
PŘEKR.				
TECHNOL.	SCHVÁLIL.		STARÝ V.	Č.V.

NÁZEV

Gearbox SGQE080

TGN3, TGH3, TGT3

Listů List