Engineering data (WIN 565)		
DC bus voltage	24	V DC
Nominal AC voltage	15	V AC (rms)
Rated voltage	11	V AC (rms)
Rated power	220	W
Rated speed	3000	rpm
Rated torque	0.70	Nm
Rated current	16.83	A (rms)
Peak torque	2.8	Nm
Peak current	70.3	A (rms)
Stall torque	0.74	Nm
Stall current	17.3	A (rms)
No load speed	5760	rpm
EMF constant ±10%	2.6	V AC (rms) / 1000rpm
Theoretical torque constant ±10%	0.04	Nm / A (rms)
Torque constant ±10% @ rated load	0.04	Nm / A (rms)
Number of poles	6	
Electrical time constant	2.27	ms
Winding terminal resistance	0.11	Ω
Rotary field terminal inductance	0.25	mH

Customs info	
HS Code	85015100

Mechanical data (setting 5)		
Max mechanical speed	12000	rpm
Mech. time constant	1.03	ms
Thermal time constant	20	min
Rotor inertia	0.1	kgcm²
Protection	IP67	
Color	RAL 9005	
Cooling	Convection	
Motor-only mass	1.5	kg

Sensors	
Temperature	PT1000 {PT1000}
Feedback	2-pole resolver (ER5Kd411, TS2620N21E11, RE-15-1-A15)

Brake		
Braking torque	2.00	Nm
Voltage	24	V DC
Power @20°C	11.0	W
Current @20°C	0.46	A
Inertia	0.08	kgcm²
Mass	0.20	kg

Torque / speed curve

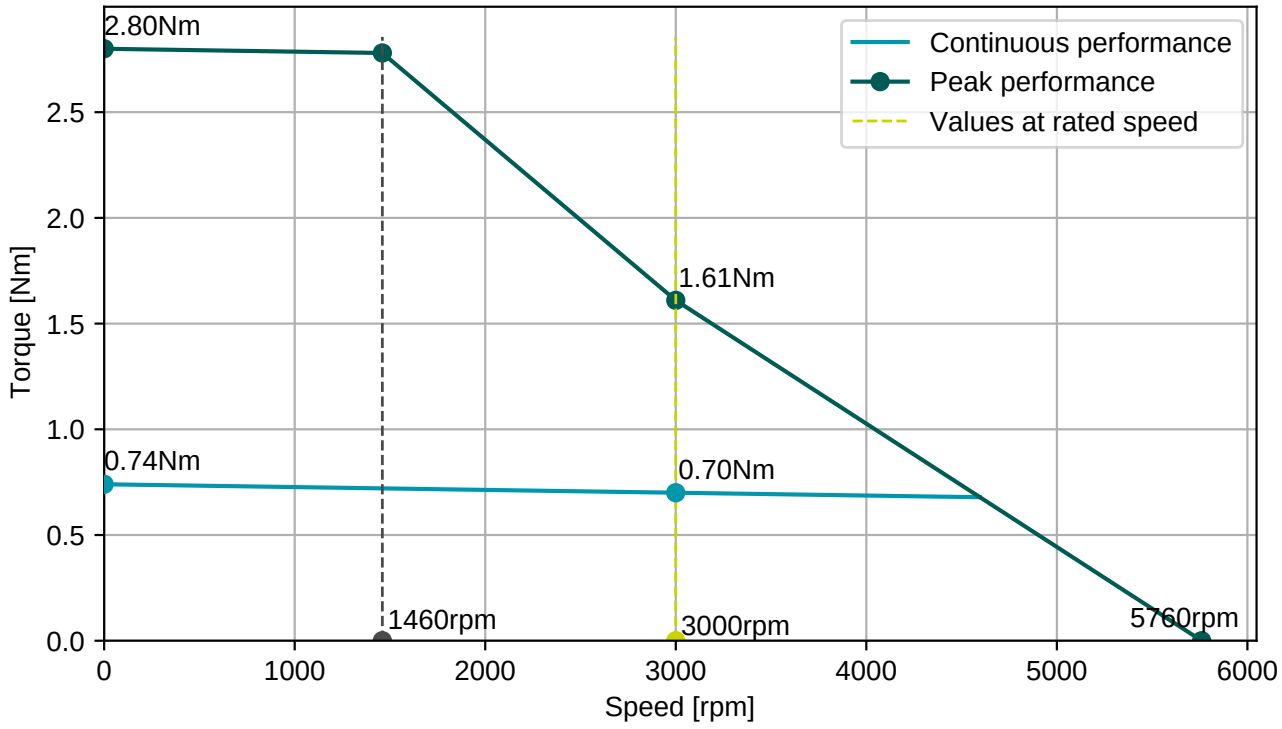

Connector 1 (259)	
white	U
blue	V
red	W

2x Therm
2x Brake

Connector 2 (32)	
red-white	R1
black-white	R2
yellow-white	R2)
red	S1
yellow	S2
black	S3
blue	S4

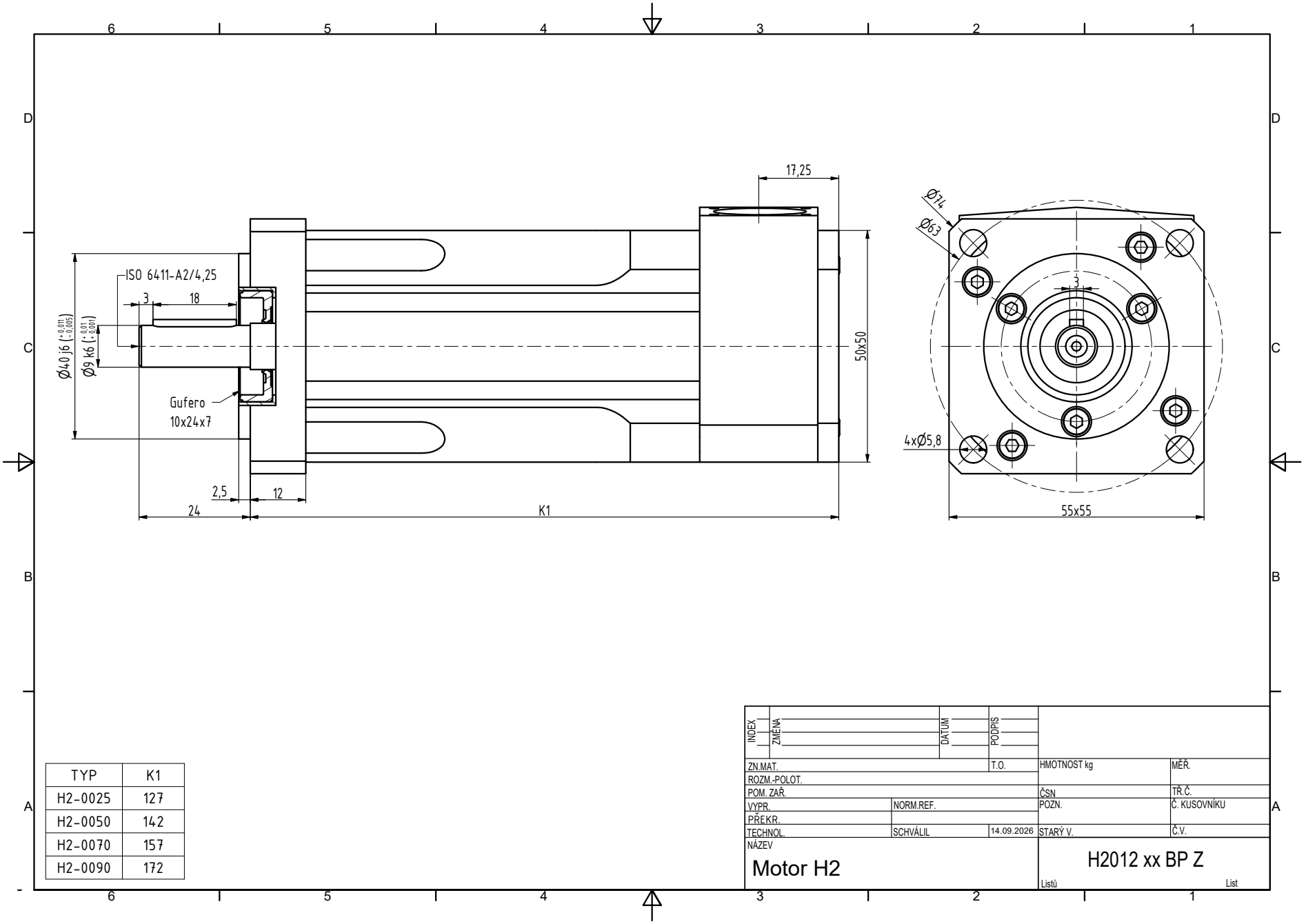

TYP	K1
H2-0025	127
H2-0050	142
H2-0070	157
H2-0090	172

INDEX	ZMĚNA	DATUM	PODPIS

ZN.MAT.		T.O.	HMOTNOST kg	MĚŘ.
ROZM.-POLOT.				
POM. ZAŘ.			ČSN	TŘ.Č.
VYPR.	NORM.REF.		POZN.	Č. KUSOVNÍKU
PŘEKR.				
TECHNOL.	SCHVÁLIL	14.09.2026	STARÝ V.	Č.V.

NÁZEV

Motor H2

H2012 xx BP Z

Listů List