Engineering data (WIN -100104)		
DC bus voltage	560	V DC
Nominal AC voltage	380	V AC (rms)
Rated voltage	301	V AC (rms)
Rated power	1.6	kW
Rated speed	200	rpm
Rated torque	75.40	Nm
Rated current	3.84	A (rms)
Peak torque	243	Nm
Peak current	14.36	A (rms)
Stall torque	81	Nm
Stall current	4	A (rms)
No load speed	310	rpm
EMF constant ±10%	1224	V AC (rms) / 1000rpm
Theoretical torque constant ±10%	20.24	Nm / A (rms)
Torque constant ±10% @ rated load	19.64	Nm / A (rms)
Number of poles	38	
Electrical time constant	3.72	ms
Winding terminal resistance	10.87	Ω
Rotary field terminal inductance	40.4	mH

Customs info	
HS Code	85015220

Mechanical data (setting 48)		
Max mechanical speed	4000	rpm
Mech. time constant	1.06	ms
Thermal time constant	71	min
Rotor inertia	230	kgcm²
Protection	IP64	
Color	RAL 9005	
Cooling	Convection	

Sensors	
Temperature	PT1000 {PT1000}
Feedback	EDS35 (HDSL) single-turn, 24 bits

Torque / speed curve

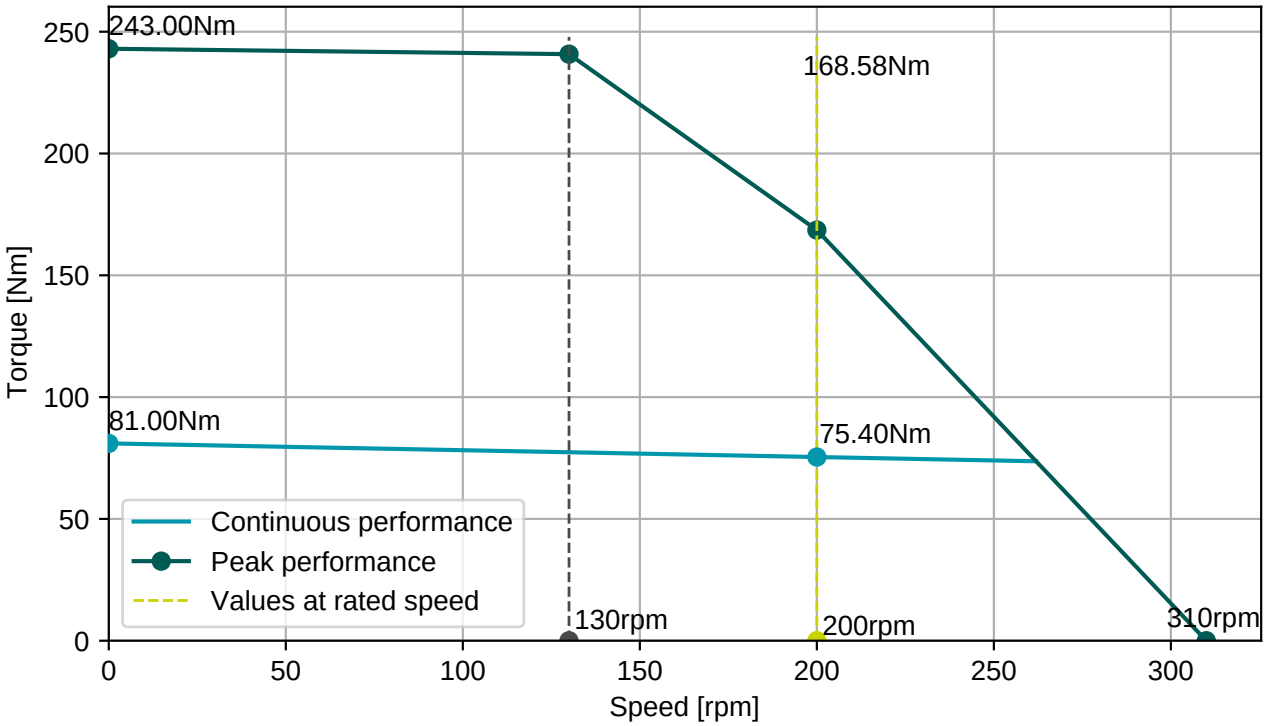

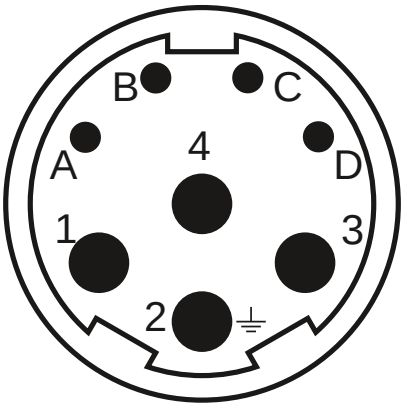

Connector 1 (283)	
1	U
4	V
3	W
2	PE
A	Brake+
B	Brake-
C	GND/DSL-
D	+Us/DSL+

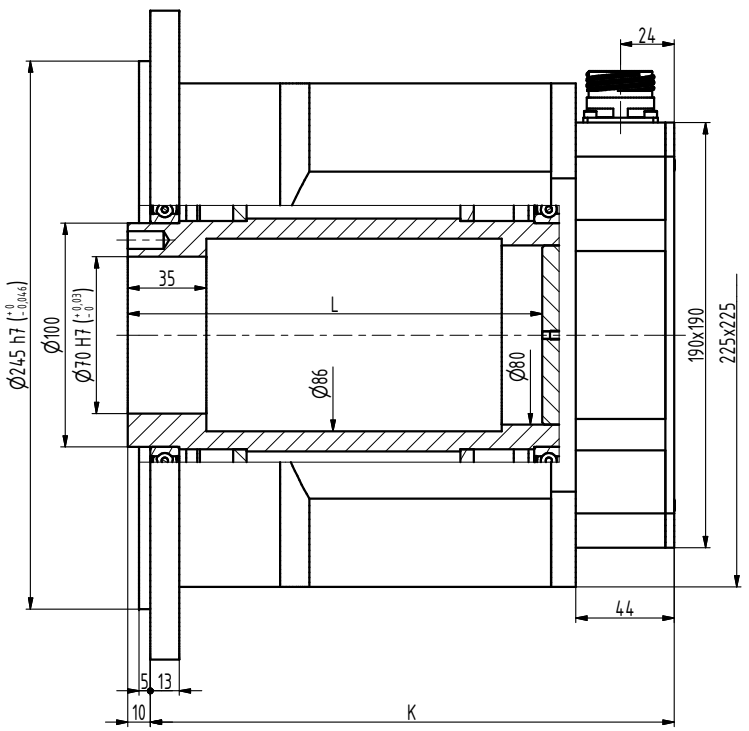

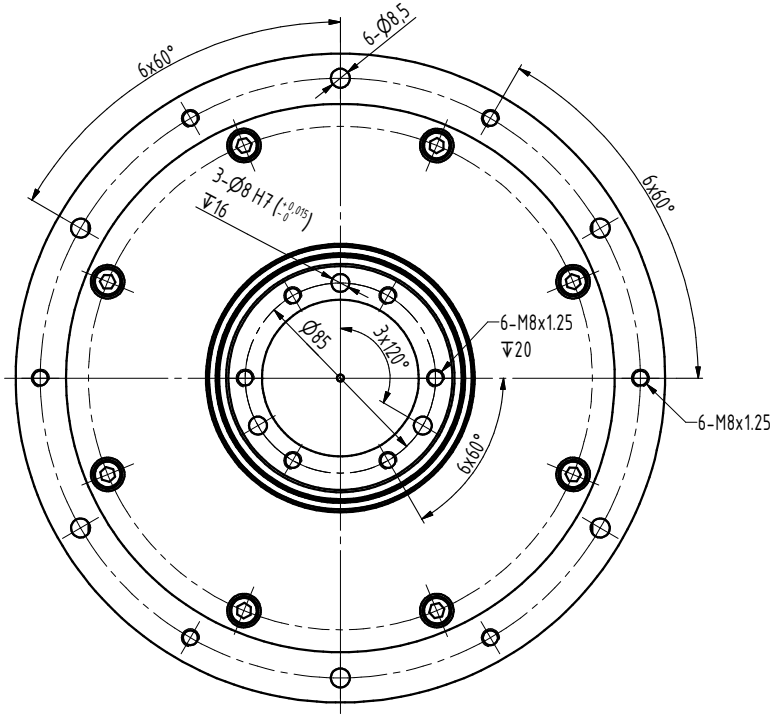

TYP	L	K
Q5-0280	95	144
Q5-0545	125	174
Q5-0810	155	204
Q5-1070	185	234
Q5-1340	215	264

INDEX	ZMĚNA	DATUM	PODPIS		
ZN.MAT.			T.O.	HMOTNOST kg	MĚŘ.
ROZM.-POLOT.					
POM. ZAŘ.				ČSN	TŘ.Č.
VYPR. Ošlejšek		NORM.REF.		POZN.	Č. KUSOVNÍKU
PŘEKR.					
TECHNOL.		SCHVÁLIL Ošlejšek	13.01.2023	STARÝ V.	Č.V.

NÁZEV

Motor Q5

Q5007 00 Z

Listů List