Engineering data (WIN 66)		
DC bus voltage	320	V DC
Nominal AC voltage	200	V AC (rms)
Rated voltage	159	V AC (rms)
Rated power	220	W
Rated speed	6000	rpm
Rated torque	0.35	Nm
Rated current	1.02	A (rms)
Peak torque	1.6	Nm
Peak current	4.7	A (rms)
Stall torque	0.4	Nm
Stall current	1.1	A (rms)
No load speed	9090	rpm
EMF constant ±10%	22	V AC (rms) / 1000rpm
Theoretical torque constant ±10%	0.36	Nm / A (rms)
Torque constant ±10% @ rated load	0.34	Nm / A (rms)
Number of poles	6	
Electrical time constant	0.80	ms
Winding terminal resistance	19.6	Ω
Rotary field terminal inductance	15.7	mH

Customs info	
HS Code	85015100

Mechanical data (setting 5)		
Max mechanical speed	12000	rpm
Mech. time constant	2.05	ms
Thermal time constant	15	min
Rotor inertia	0.08	kgcm²
Protection	IP67	
Color	RAL 9005	
Cooling	Convection	
Motor-only mass	1.5	kg

Sensors	
Temperature	KTY 83-110 {KTY 83-110 Reissmann}
Feedback	2-pole resolver (ER5Kd411, TS2620N21E11, RE-15-1-A15)

Brake		
Braking torque	2.00	Nm
Voltage	24	V DC
Power @20°C	11.0	W
Current @20°C	0.46	A
Inertia	0.08	kgcm²
Mass	0.20	kg

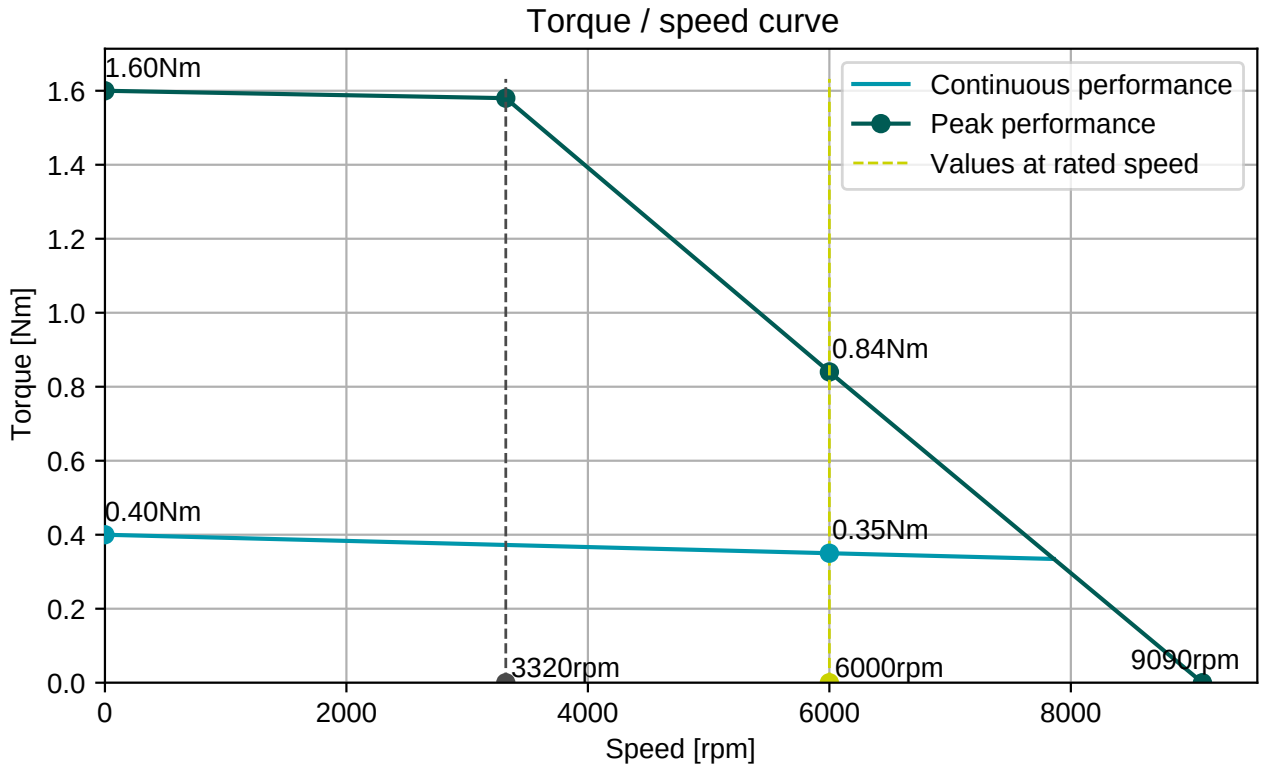

Connector 1 (259)	
white	U
blue	V
red	W

2x Therm
2x Brake

Connector 2 (32)	
red-white	R1
black-white	R2
yellow-white	R2)
red	S1
yellow	S2
black	S3
blue	S4

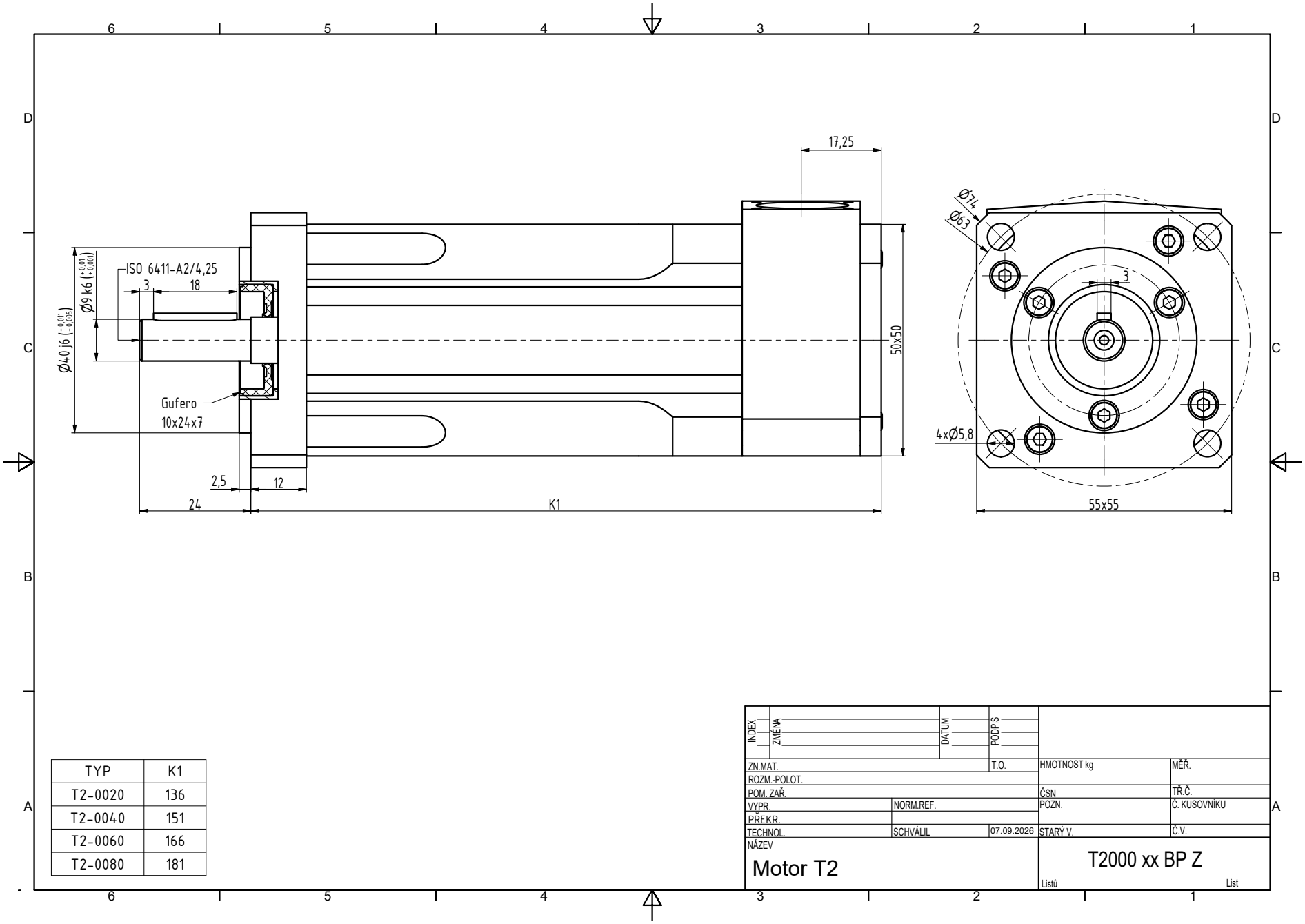

TYP	K1
T2-0020	136
T2-0040	151
T2-0060	166
T2-0080	181

INDEX	ZMĚNA	DATUM	PODPIS		
ZN.MAT.			T.O.	HMOTNOST kg	MĚŘ.
ROZM.-POLOT.					
POM. ZAŘ.				ČSN	TŘ.Č.
VYPR.		NORM.REF.		POZN.	Č. KUSOVNÍKU
PŘEKR.					
TECHNOL.		SCHVÁLIL	07.09.2026	STARÝ V.	Č.V.
NÁZEV	Motor T2			T2000 xx BP Z	
				Listů	List