Engineering data (WIN 159)		
DC bus voltage	560	V DC
Nominal AC voltage	330	V AC (rms)
Rated voltage	308	V AC (rms)
Rated power	2.0	kW
Rated speed	3000	rpm
Rated torque	6.40	Nm
Rated current	4.35	A (rms)
Peak torque	30	Nm
Peak current	29.4	A (rms)
Stall torque	7.5	Nm
Stall current	4.82	A (rms)
No load speed	3510	rpm
EMF constant ±10%	94	V AC (rms) / 1000rpm
Theoretical torque constant ±10%	1.55	Nm / A (rms)
Torque constant ±10% @ rated load	1.47	Nm / A (rms)
Number of poles	6	
Electrical time constant	6.40	ms
Winding terminal resistance	3	Ω
Rotary field terminal inductance	19.2	mH

Customs info	
HS Code	85015220

Mechanical data (setting 5)		
Max mechanical speed	12000	rpm
Mech. time constant	0.89	ms
Thermal time constant	66	min
Rotor inertia	4.15	kgcm²
Protection	IP64	
Color	RAL 9005	
Cooling	Convection	
Motor-only mass	8.1	kg

Sensors	
Temperature	KTY 84-130 {KTY 84-130 Reissmann}
Feedback	2-pole resolver (ER5Kd411, TS2620N21E11, RE-15-1-A15)

Torque / speed curve

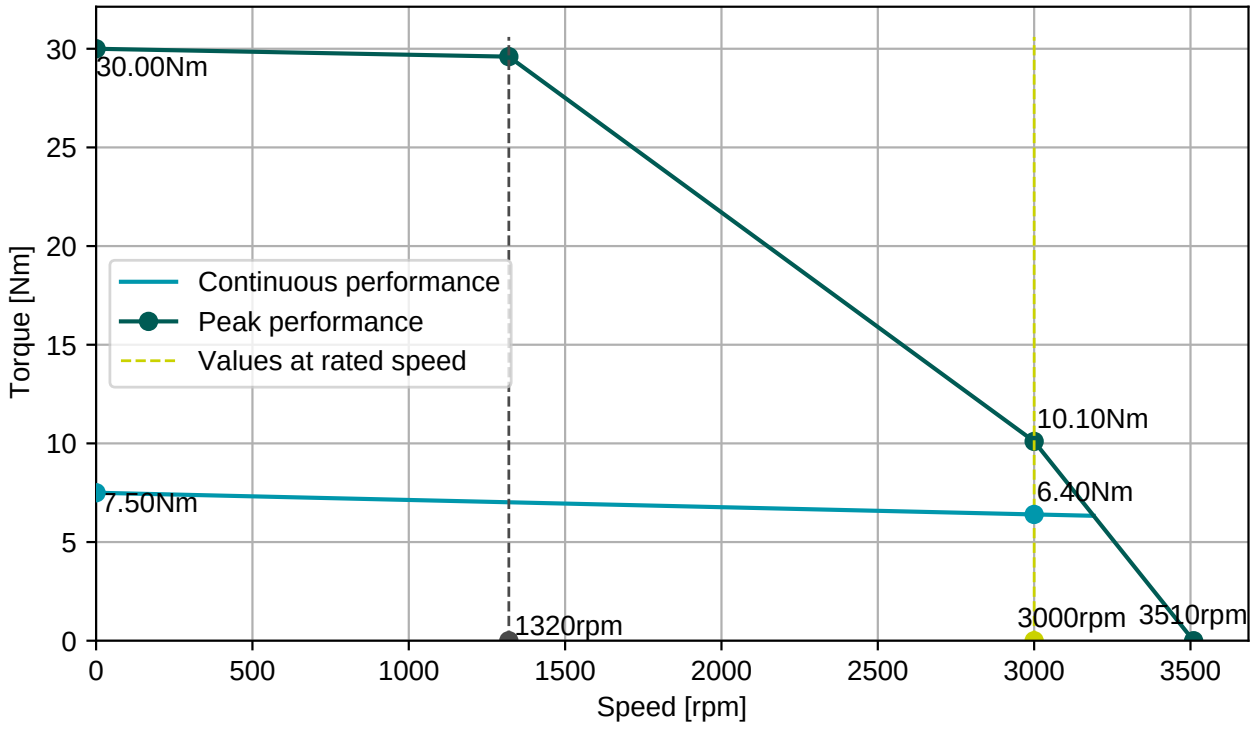

BGC110N00001216000
M23, 8 poles, rotary

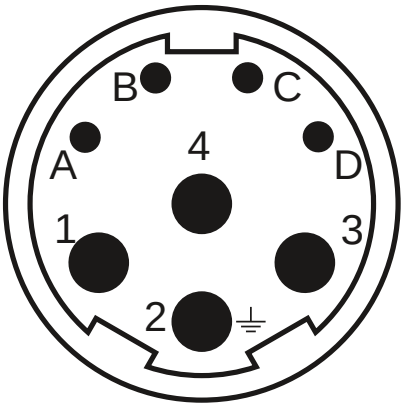

AGC052N00001215000
M23, 12 poles, rotary

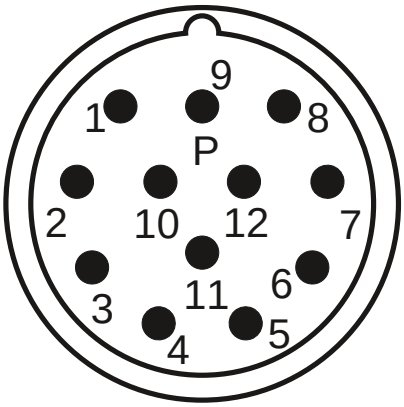

Connector 1 (9)	
1	U
4	V
3	W
2	PE
A	Brake+
B	Brake-
C	
D	

Connector 2 (10)	
2	Therm+
3	S4
4	S3
5	R2
6	Therm-
7	S2
8	S1
9	R1

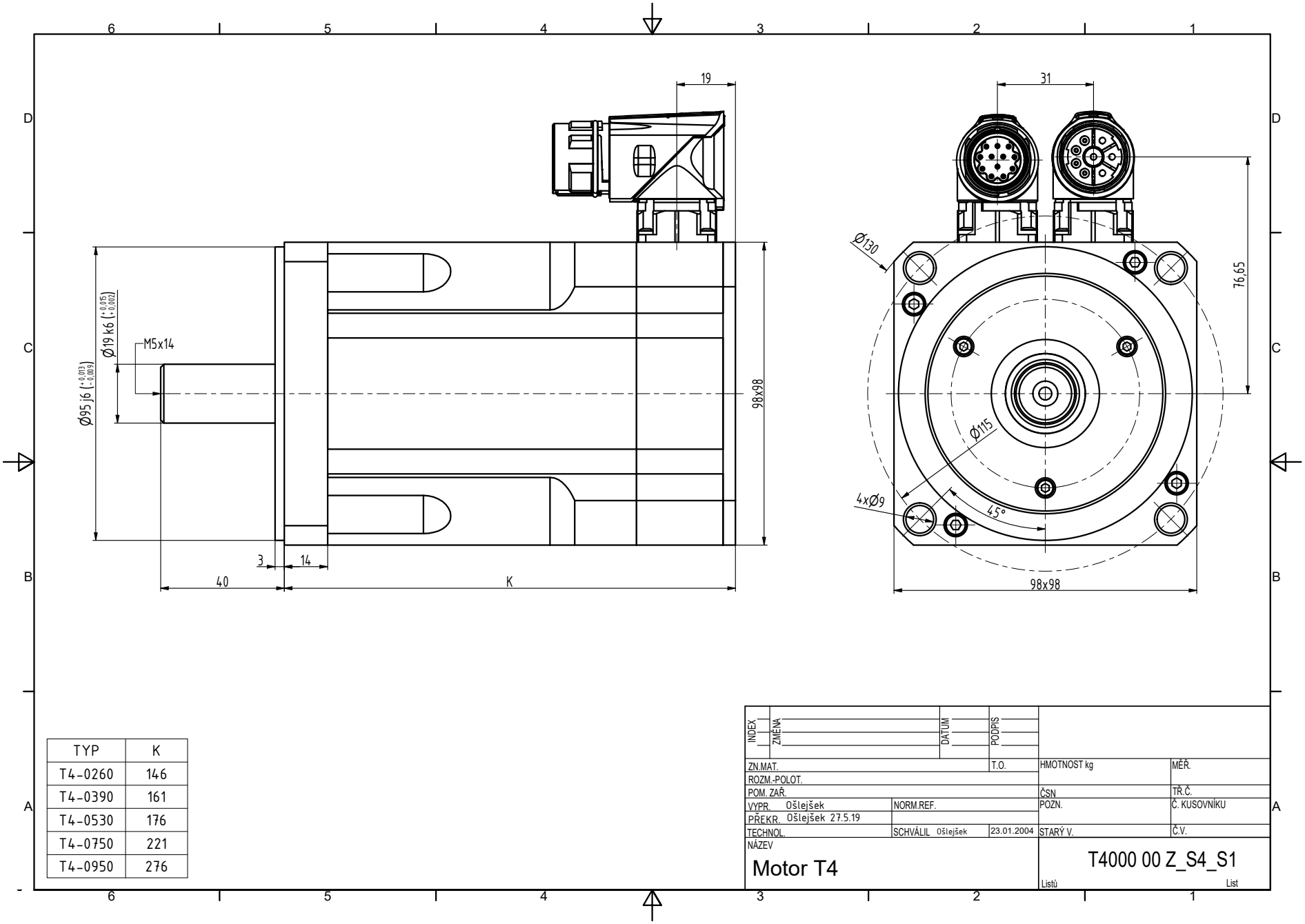

TYP	K
T4-0260	146
T4-0390	161
T4-0530	176
T4-0750	221
T4-0950	276

INDEX	ZMĚNA	DATUM	PODPIS

ZN.MAT.			T.O.	HMOTNOST kg	MĚŘ.
ROZM.-POLOT.					
POM. ZAŘ.				ČSN	TŘ.Č.
VYPR. Ošlejšek	NORM.REF.			POZN.	Č. KUSOVNÍKU
PŘEKR. Ošlejšek 27.5.19					
TECHNOL.	SCHVÁLIL Ošlejšek	23.01.2004		STARÝ V.	Č.V.

NÁZEV

Motor T4

T4000 00 Z_S4_S1

Listů List