Engineering data (WIN 1655)		
DC bus voltage	24	V DC
Nominal AC voltage	17	V AC (rms)
Rated voltage	16	V AC (rms)
Rated power	125	W
Rated speed	1300	rpm
Rated torque	0.92	Nm
Rated current	7.5	A (rms)
Peak torque	2.4	Nm
Peak current	25	A (rms)
Stall torque	0.95	Nm
Stall current	6.8	A (rms)
No load speed	1960	rpm
EMF constant ±10%	8.43	V AC (rms) / 1000rpm
Theoretical torque constant ±10%	0.139	Nm / A (rms)
Torque constant ±10% @ rated load	0.123	Nm / A (rms)
Number of poles	10	
Electrical time constant	1.93	ms
Winding terminal resistance	0.522	Ω
Rotary field terminal inductance	1.01	mH

Customs info	
HS Code	85015100

Mechanical data (setting 0)		
Max mechanical speed	12000	rpm
Mech. time constant	2.32	ms
Thermal time constant	25	min
Rotor inertia	0.5	kgcm²
Protection	IP64	
Color	RAL 9005	
Cooling	Convection	

Sensors	
Temperature	PT1000 {PT1000}

Note

We assume BISS-C. The resolution should be specified.

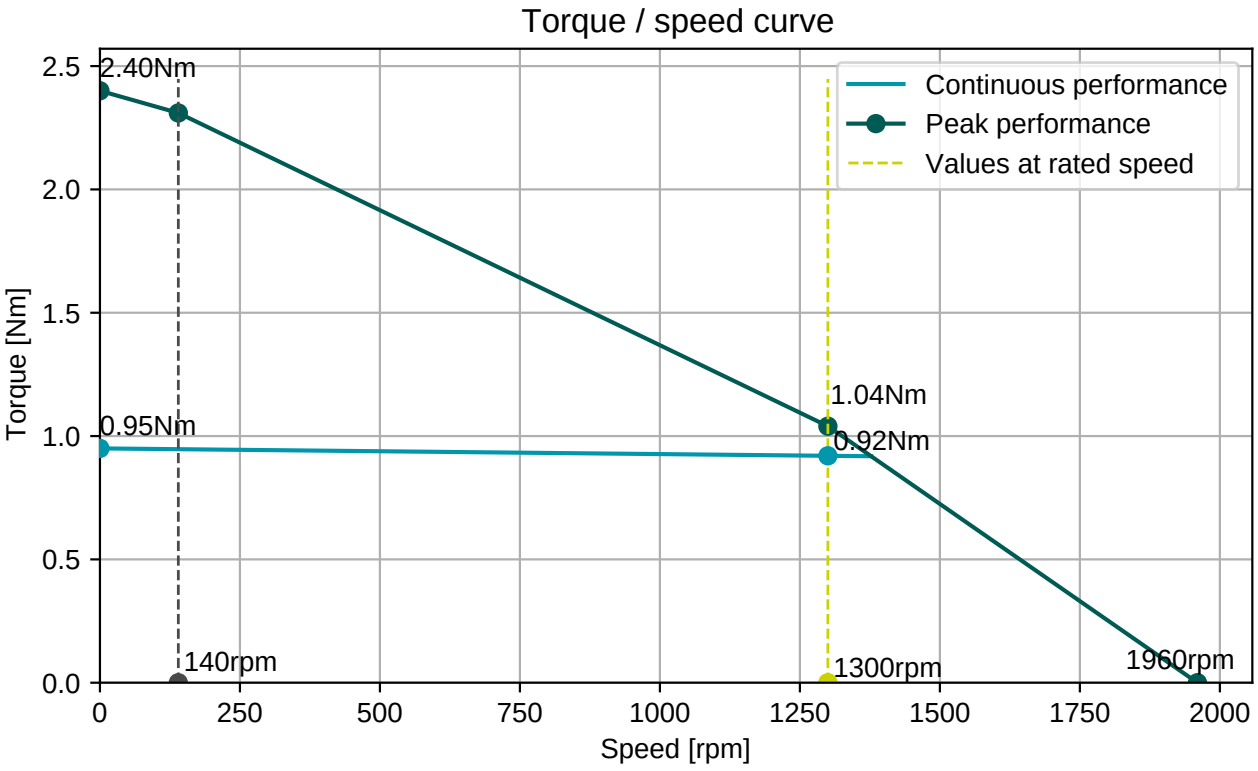
Torque / speed curve
Continuous performance
Peak performance
Values at rated speed
2.40Nm
1.04Nm
0.95Nm
0.92Nm
140rpm
1300rpm
1960rpm
Torque [Nm]
Speed [rpm]
2.5
2.0
1.5
1.0
0.5
0.0
0
250
500
750
1000
1250
1500
1750
2000

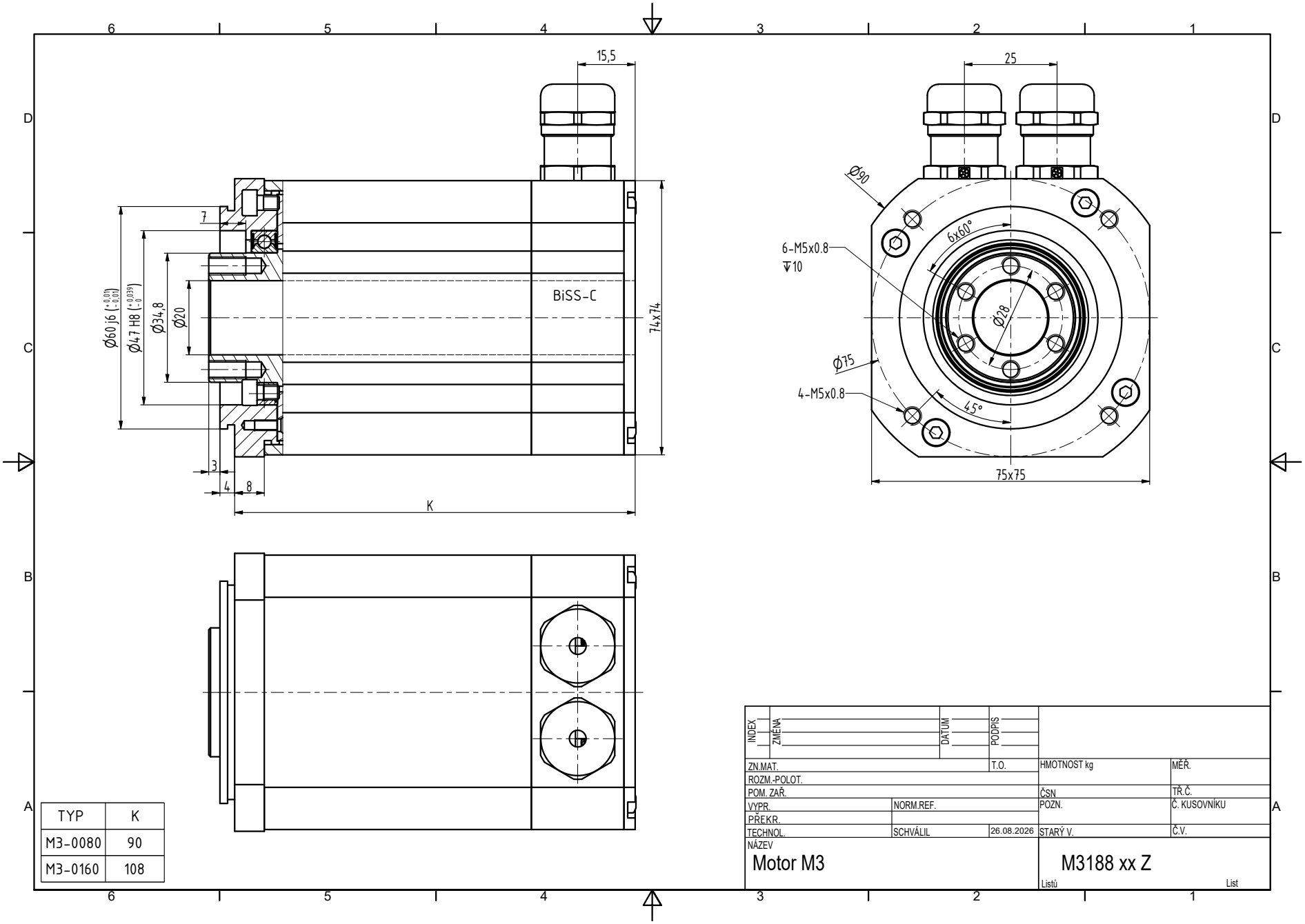

TYP	K
M3-0080	90
M3-0160	108

INDEX	ZMĚNA	DATUM	PODPIS		
ZN.MAT.			T.O.	HMOTNOST kg	MĚŘ.
ROZM.-POLOT.					
POM. ZAŘ.				ČSN	TŘ.Č.
VYPR.		NORM.REF.		POZN.	Č. KUSOVNÍKU
PŘEKR.					
TECHNOL.		SCHVÁLIL	26.08.2026	STARÝ V.	Č.V.
NÁZEV	Motor M3			M3188 xx Z	
				Listů	List