Engineering data (WIN -100102)		
DC bus voltage	24	V DC
Nominal AC voltage	17	V AC (rms)
Rated voltage	15	V AC (rms)
Rated power	209	W
Rated speed	1000	rpm
Rated torque	2.00	Nm
Rated current	13.23	A (rms)
Peak torque	6.15	Nm
Peak current	50.22	A (rms)
Stall torque	2.05	Nm
Stall current	12.39	A (rms)
No load speed	1680	rpm
EMF constant ±10%	10	V AC (rms) / 1000rpm
Theoretical torque constant ±10%	0.17	Nm / A (rms)
Torque constant ±10% @ rated load	0.15	Nm / A (rms)
Number of poles	10	
Electrical time constant	2.52	ms
Winding terminal resistance	0.27	Ω
Rotary field terminal inductance	0.68	mH

Customs info	
HS Code	85015100

Mechanical data (setting 5)		
Max mechanical speed	12000	rpm
Mech. time constant	0.94	ms
Thermal time constant	23	min
Rotor inertia	0.55	kgcm²
Protection	IP67	
Color	EPOX3 (RAL 9005)	
Cooling	Convection	
Motor-only mass	1.9	kg
Max. axial force 20kh	80	N
Max. radial force 20kh*	422	N
Max. axial force 100kh	47	N
Max. radial force 100kh*	247	N

** Defined for point of action at ½ output shaft length*

Sensors	
Temperature	PT1000 {PT1000}
Feedback	ELS35-0CA0A024A

Note

Cables length 1m
The winding of the motor has rated current 13.23 A. Power cable is rated only for 10 A. The motor can be operated only with continuous current limited to 10 A in servoamplifier. Otherwise the power cable could be burned.

Torque / speed curve

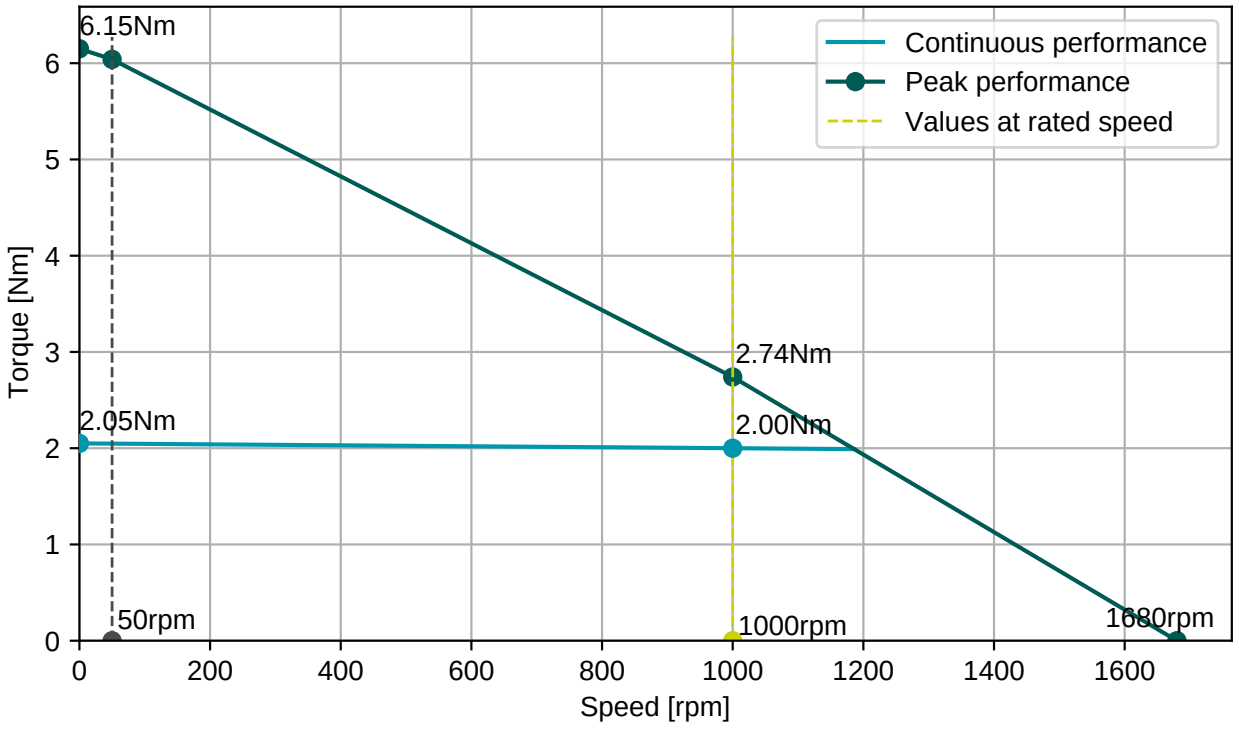

Cable SF4x1,5, D=9,6±0,4mm

Connector 1 (21)	
1	U
2	V
3	W
PE	PE
5	Brake+
6	Brake-

Numbers printed on the cables

Cable R4x2x0,25, D=6,8±0,4mm

Connector 2

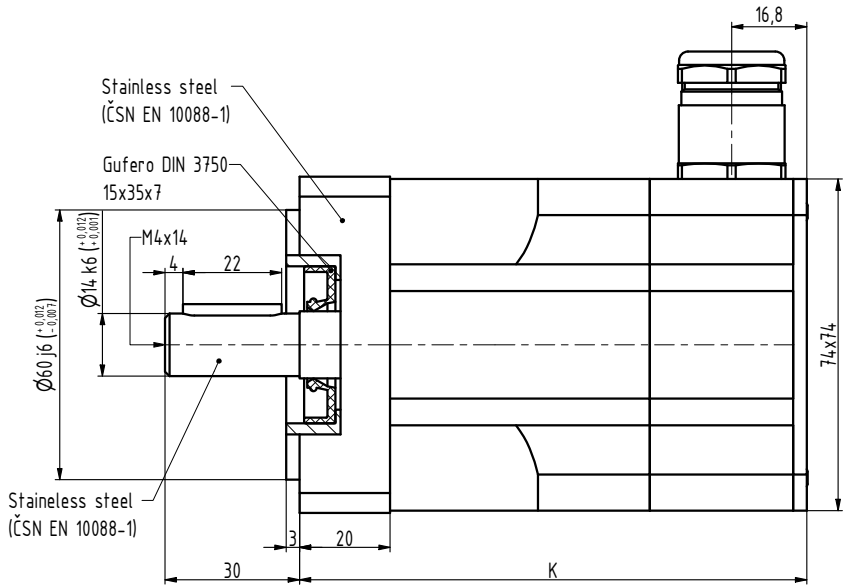

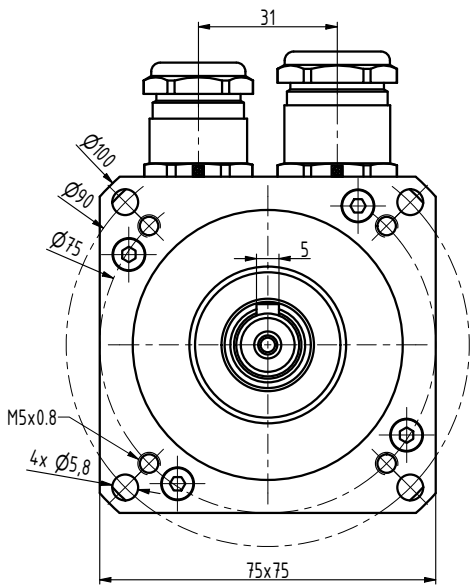

TYP	K
N3-0115	95
N3-0205	113
N3-0280	131
N3-0350	149
N3-0420	167
N3-0480	185

INDEX	ZMĚNA	DATUM	PODPIS		
ZN.MAT.			T.O.	HMOTNOST kg	MĚŘ.
ROZM.-POLOT.					
POM. ZAŘ.				ČSN	TŘ.Č.
VYPR.		NORM.REF.		POZN.	Č. KUSOVNÍKU
PŘEKR.					
TECHNOL.		SCHVÁLIL	26.08.2026	STARÝ V.	Č.V.
NÁZEV	Motor N3			N3111 xx P Z	
				Listů	List