Engineering data (WIN -100100)		
DC bus voltage	28	V DC
Nominal AC voltage	18	V AC (rms)
Rated voltage	13	V AC (rms)
Rated power	185	W
Rated speed	500	rpm
Rated torque	3.53	Nm
Rated current	13.24	A (rms)
Peak torque	10.98	Nm
Peak current	58.08	A (rms)
Stall torque	3.66	Nm
Stall current	13.41	A (rms)
No load speed	1090	rpm
EMF constant ±10%	16.5	V AC (rms) / 1000rpm
Theoretical torque constant ±10%	0.27	Nm / A (rms)
Torque constant ±10% @ rated load	0.27	Nm / A (rms)
Number of poles	10	
Electrical time constant	8.82	ms
Winding terminal resistance	0.203	Ω
Rotary field terminal inductance	1.79	mH

Customs info	
HS Code	85015100

Mechanical data (setting 0)		
Max mechanical speed	9000	rpm
Mech. time constant	0.80	ms
Thermal time constant	29	min
Rotor inertia	1.7	kgcm²
Protection	IP64	
Color	RAL 9005	
Cooling	Convection	

Sensors	
Temperature	PT1000 {PT1000}

Brake		
Braking torque	9.00	Nm
Voltage	24	V DC
Power @20°C	18.0	W
Current @20°C	0.75	A
Inertia	0.60	kgcm²
Mass	0.82	kg

Note

Parameters are modified for requirements:

- For two hours continuously at environmental temperature 60°C.
- Working Point - Peak torgue/current for 3 [sec] maximum, duty cycle 30%, duration of 5 minut es at environmental temperature 60°C.

We assume Halls sensors + BISS-C. The resolution should be specified.

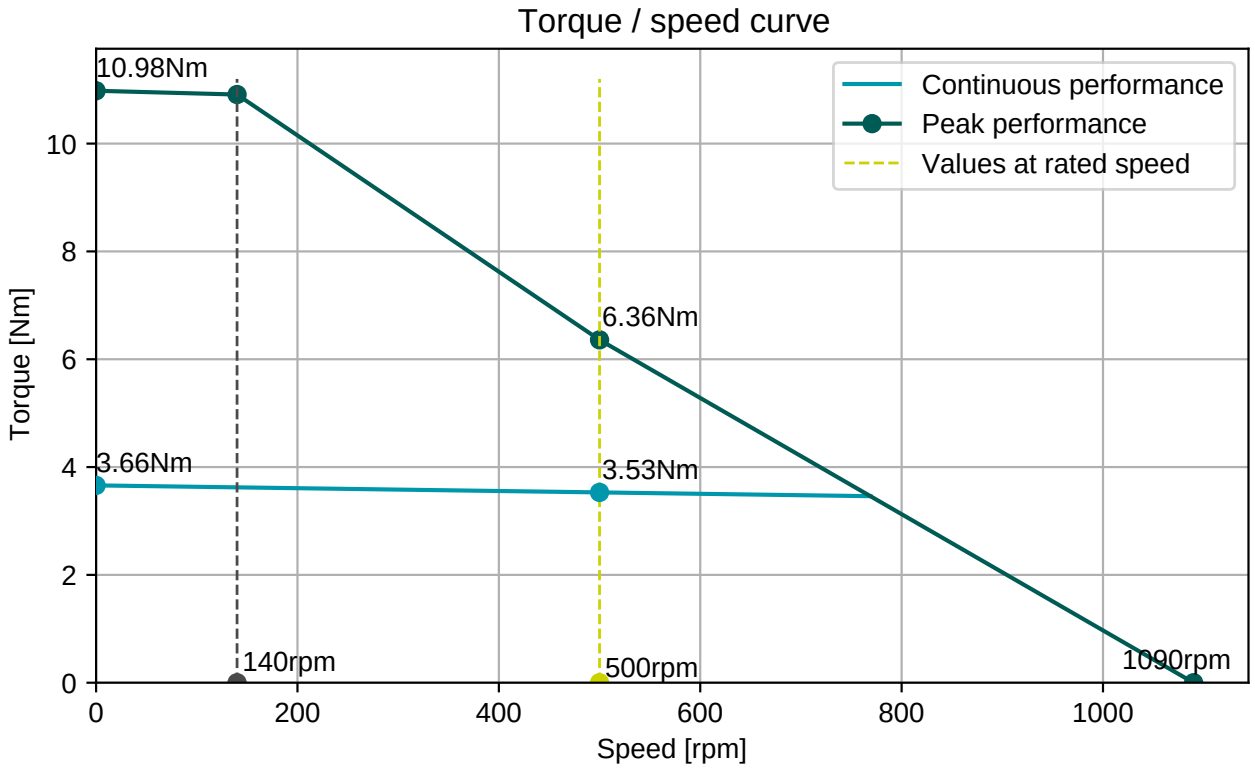
Torque / speed curve
Continuous performance
Peak performance
Values at rated speed
10.98Nm
6.36Nm
3.66Nm
3.53Nm
140rpm
500rpm
1090rpm
Torque [Nm]
Speed [rpm]
0
2
4
6
8
10
0
200
400
600
800
1000

Preliminary

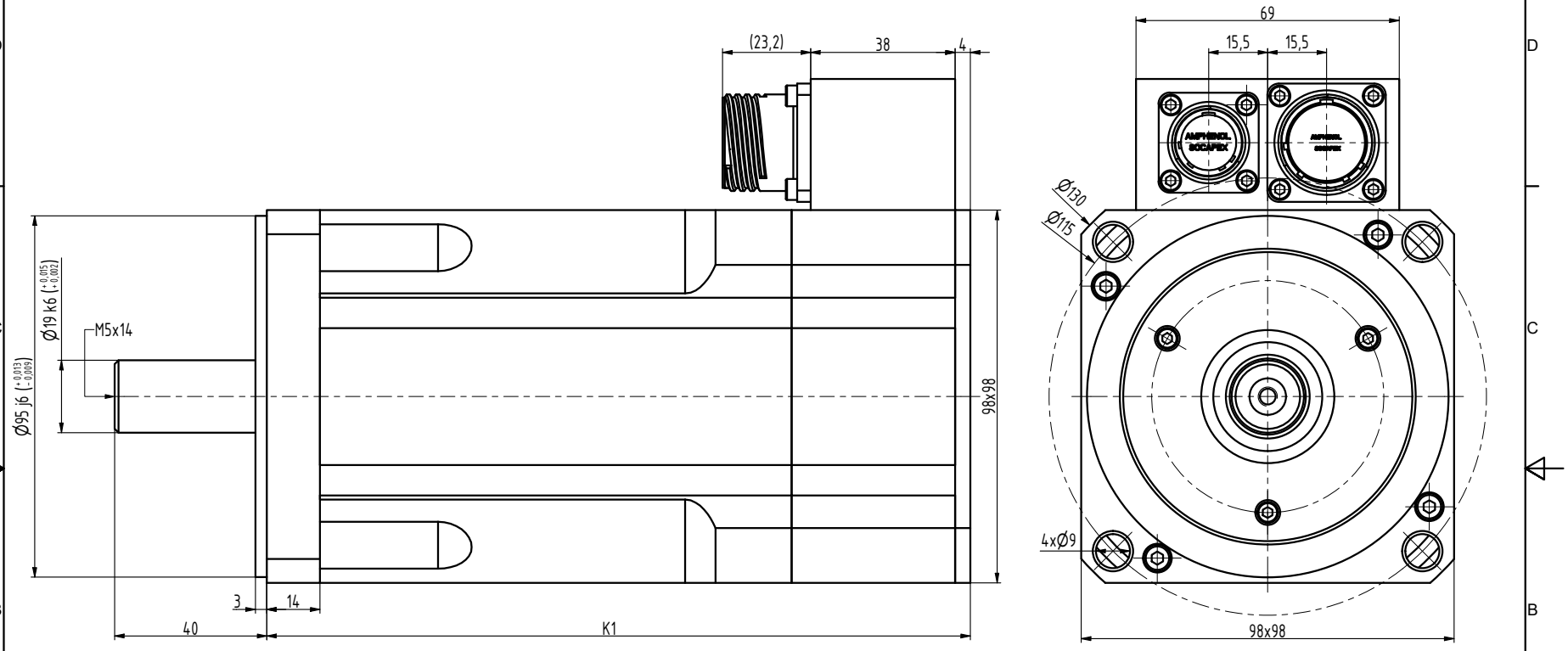

TYP	K1
H4-0370	185
H4-0570	215
H4-0780	245

INDEX	ZMĚNA	DATUM	PODPIS		
ZN.MAT.		T.O.	HMOTNOST kg	MĚŘ.	
ROZM.-POLOT.					
POM. ZAŘ.			ČSN	TŘ.Č.	
VYPR.	NORM.REF.		POZN.	Č. KUSOVNÍKU	
PŘEKR.					
TECHNOL.	SCHVÁLIL	26.08.2026	STARÝ V.	Č.V.	
NÁZEV					
Motor H4			H4008 xx B Z		
			Listů	List	