Engineering data (WIN 1289)		
DC bus voltage	24	V DC
Nominal AC voltage	15	V AC (rms)
Rated voltage	14	V AC (rms)
Rated power	170	W
Rated speed	6000	rpm
Rated torque	0.27	Nm
Rated current	8.85	A (rms)
Peak torque	1.2	Nm
Peak current	40.6	A (rms)
Stall torque	0.3	Nm
Stall current	9.4	A (rms)
No load speed	7760	rpm
EMF constant ±10%	1.9	V AC (rms) / 1000rpm
Theoretical torque constant ±10%	0.032	Nm / A (rms)
Torque constant ±10% @ rated load	0.031	Nm / A (rms)
Number of poles	6	
Electrical time constant	0.42	ms
Winding terminal resistance	0.216	Ω
Rotary field terminal inductance	0.09	mH

Customs info	
HS Code	85015100

Mechanical data (setting 62)		
Max mechanical speed	12000	rpm
Mech. time constant	2.65	ms
Thermal time constant	22	min
Rotor inertia	0.07	kgcm²
Protection	IP64	
Color	RAL 9005	
Cooling	Convection	
Motor-only mass	0.95	kg

Sensors	
Temperature	PTC 111-K13 {PTC 111-K13 Reissmann}
Feedback	RMC35UC12BAA10 - 4096 counts/rev.

Torque / speed curve

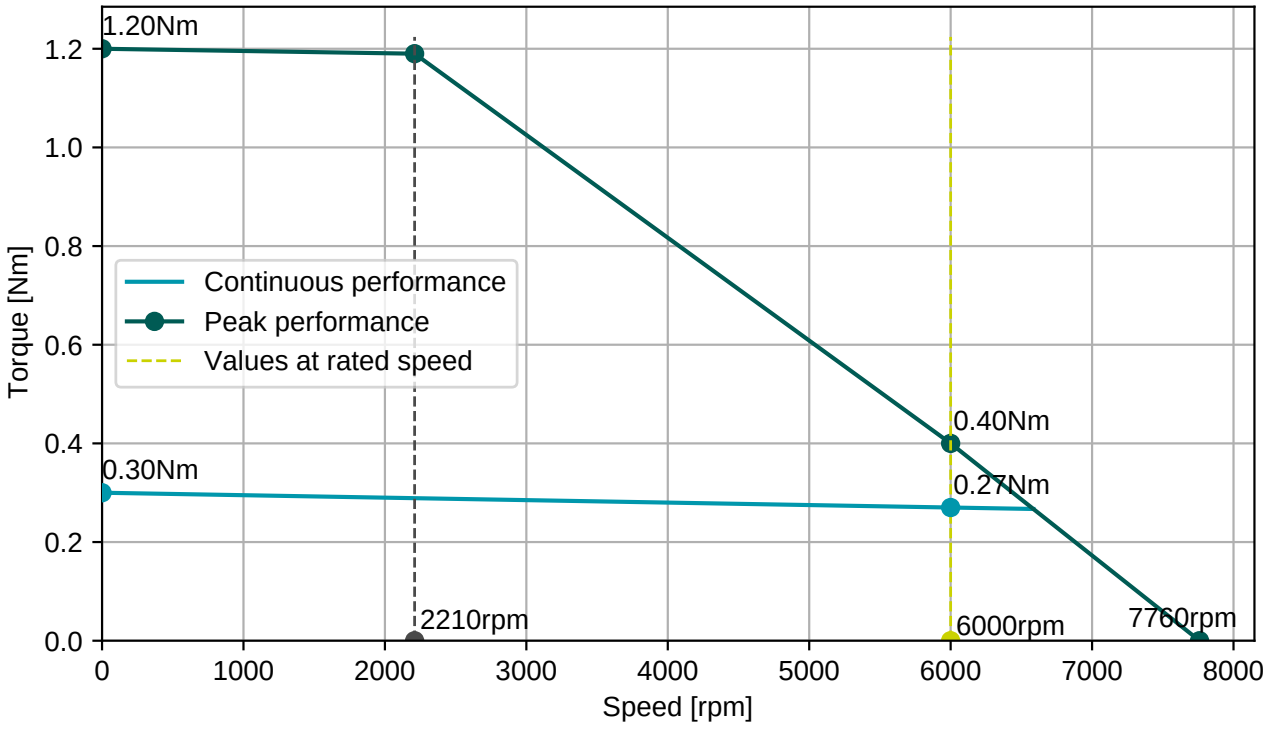

EGA101N00000001000

2x M15, 9 and 12 poles rotary

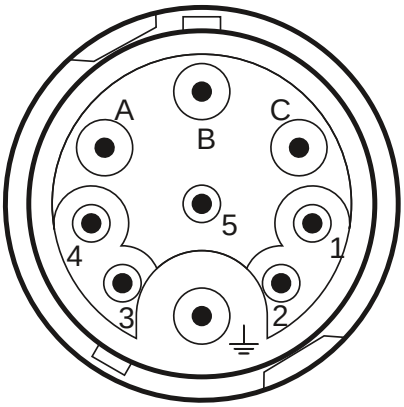

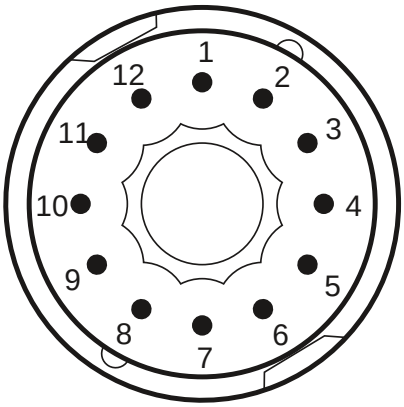

Connector 1 (204)	
A	U
B	V
C	W
PE	PE
1	Therm+
2	Therm-
3	Brake+
4	Brake-

Connector 2 (420)	
1	U
2	V
3	W
4	A
5	B
6	Z (N)
7	GND
8	n.c.
9	+5 Vcc
10	A/
11	B/
12	Z/ (N/)

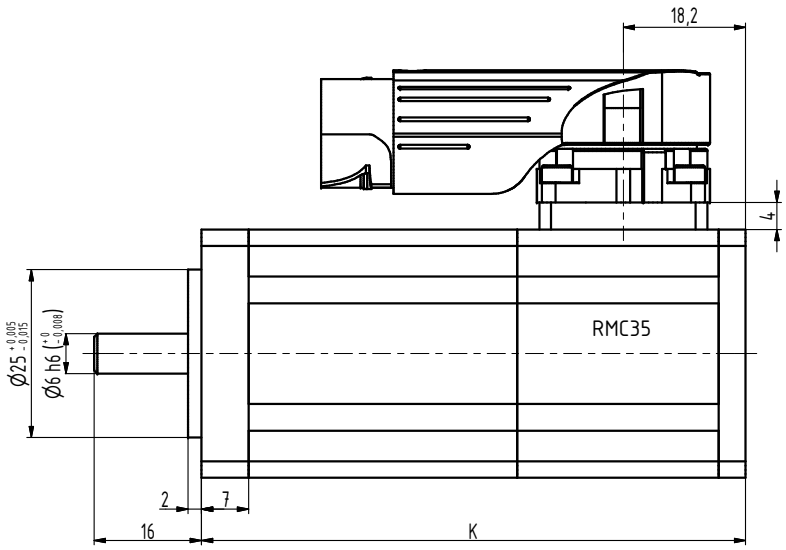

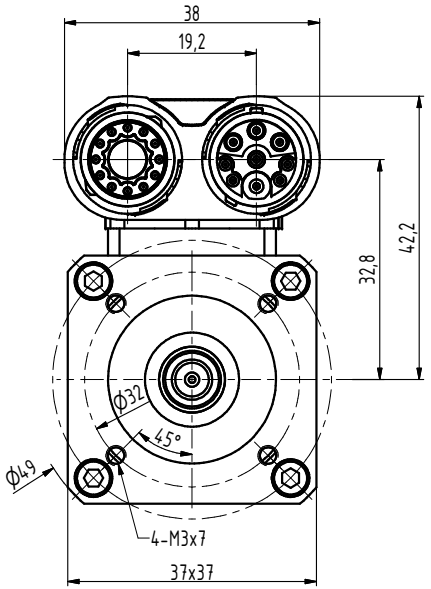

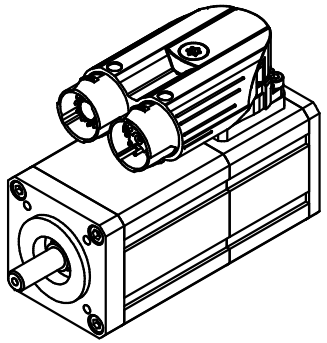

TYP	K
S1-0010	81
S1-0020	96
S1-0030	111

INDEX	ZMĚNA	DATUM	PODPIS		
ZN.MAT.		T.O.	HMOTNOST kg	MĚŘ. 2:1	
ROZM.-POLOT.					TŘ.Č.
POM. ZAŘ.			ČSN		
VYPR. Ošlejšek	NORM.REF.		POZN.		Č. KUSOVNÍKU
PŘEKR.					
TECHNOL.	SCHVÁLIL Ošlejšek	18.11.2021	STARÝ V.		Č.V.
NÁZEV					
Motor S1			S1033 04 Z		
			Listů	List	