Engineering data (WIN 628)		
DC bus voltage	24	V DC
Nominal AC voltage	15	V AC (rms)
Rated voltage	11	V AC (rms)
Rated power	79	W
Rated speed	3000	rpm
Rated torque	0.25	Nm
Rated current	7.54	A (rms)
Peak torque	1	Nm
Peak current	30.8	A (rms)
Stall torque	0.26	Nm
Stall current	7.5	A (rms)
No load speed	7000	rpm
EMF constant ±10%	2.1	V AC (rms) / 1000rpm
Theoretical torque constant ±10%	0.03	Nm / A (rms)
Torque constant ±10% @ rated load	0.03	Nm / A (rms)
Number of poles	6	
Electrical time constant	1.62	ms
Winding terminal resistance	0.37	Ω
Rotary field terminal inductance	0.6	mH

Customs info	
HS Code	85015100

Mechanical data (setting 6)		
Max mechanical speed	12000	rpm
Mech. time constant	3.19	ms
Thermal time constant	13	min
Rotor inertia	0.06	kgcm²
Protection	IP64	
Color	RAL 9005	
Cooling	Convection	
Motor-only mass	0.9	kg

Sensors	
Temperature	PT1000 {PT1000}
Feedback	2-pole resolver (ER5Kd411, TS2620N21E11, RE-15-1-A15)

Note

Wires U,V,W (Betatherm 0,5mm2, diameter 2,7mm)
Actual lengths - 65mm, will be changed to 55mm
Resolver and PT1000
Actual lengths - 65mm, will be changed to 55mm

(Changed cables lengths - 30.07.2026)

Torque / speed curve

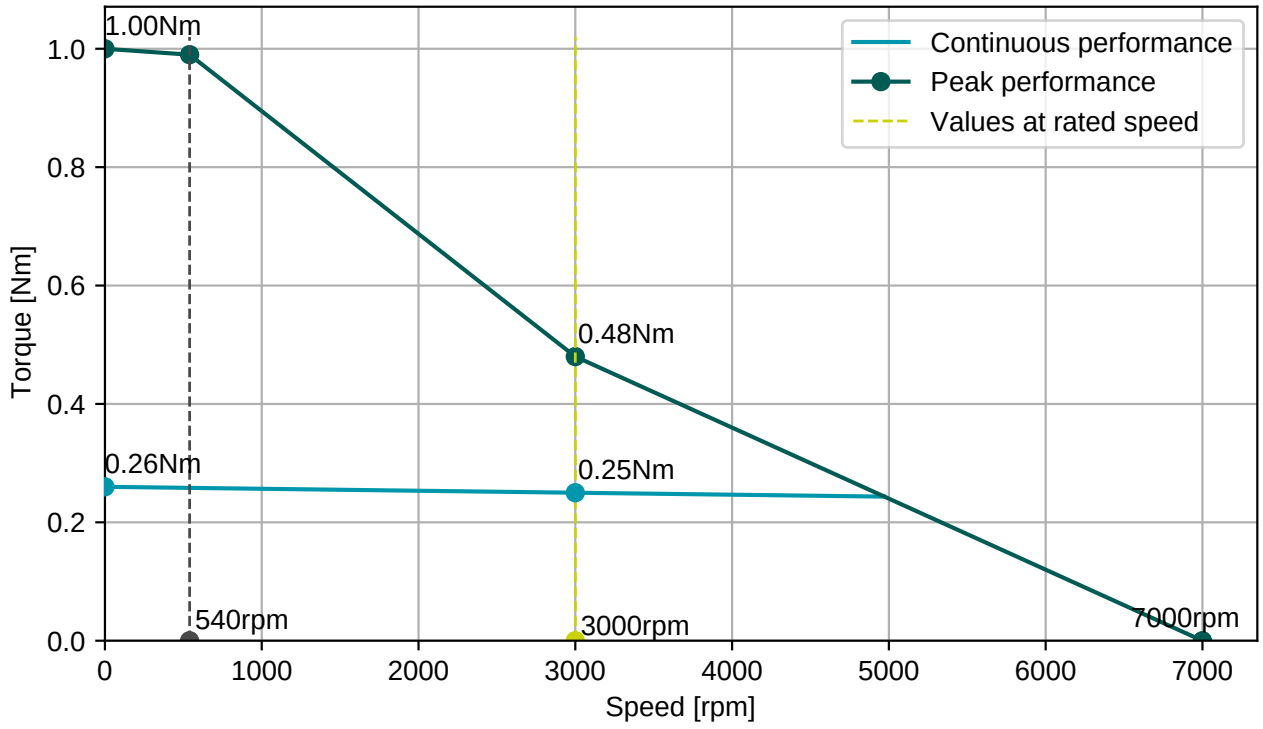

Female Angled Terminal

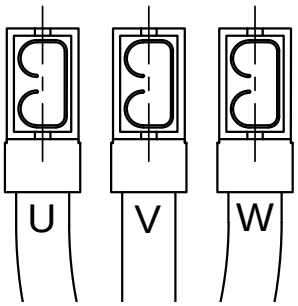

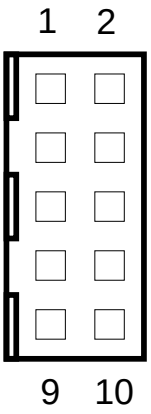

Connector 1 (171)	
white	U
blue	V
red	W

Wires ends assembled by round Female Right Angled Terminal

Connector 2 (170)	
1	S1 (red)
2	S3 (black)
3	S4 (blue)
4	S2 (yellow)
5	R2 (yellow/white)
6	R1 (red/white)
7	Brake+
8	Brake-
9	Therm-
10	Therm+

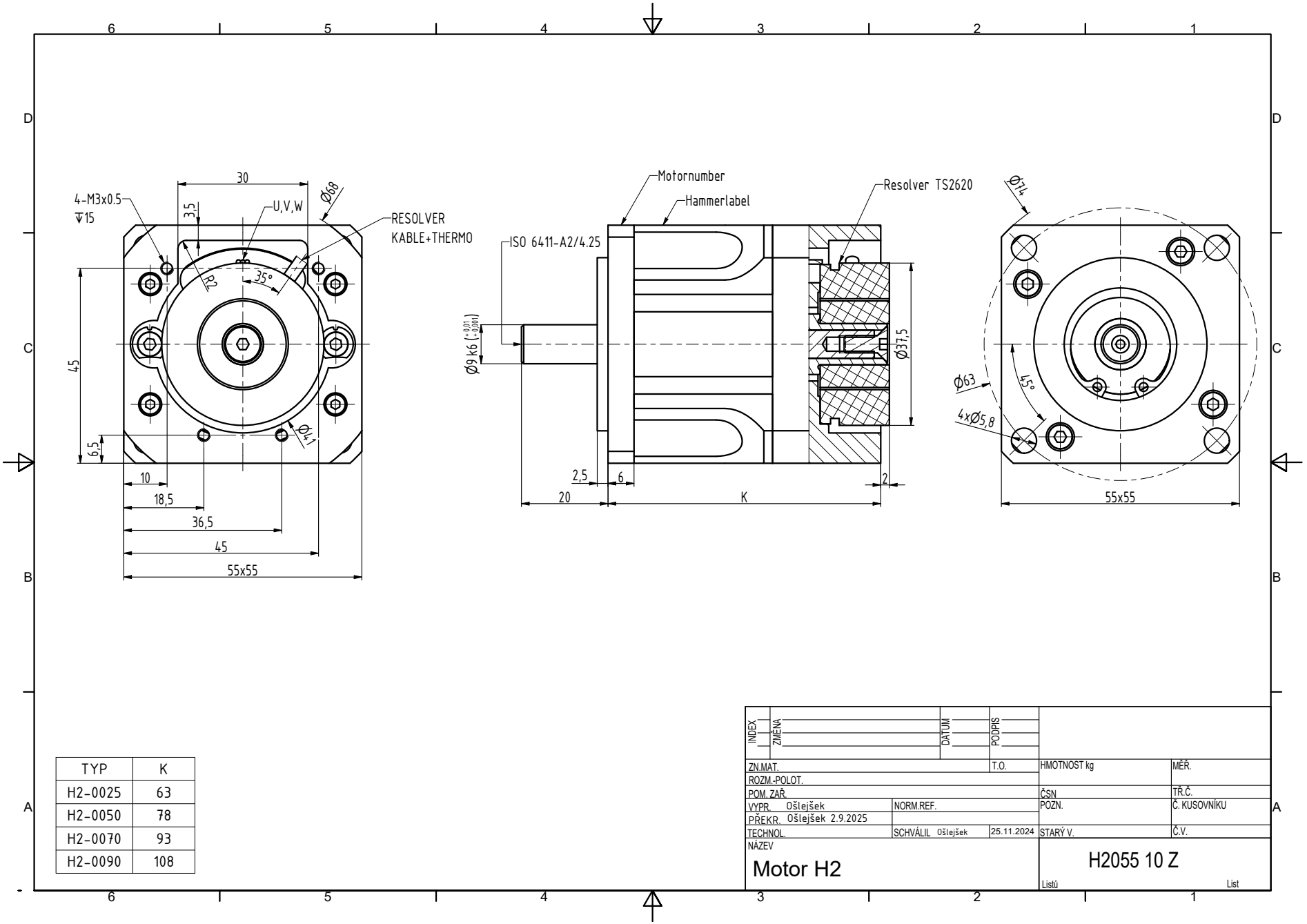

TYP	K
H2-0025	63
H2-0050	78
H2-0070	93
H2-0090	108

INDEX	ZMĚNA	DATUM	PODPIS

ZN.MAT.		T.O.	HMOTNOST kg	MĚŘ.
ROZM.-POLOT.				
POM. ZAŘ.			ČSN	TŘ.Č.
VYPR. Ošlejšek	NORM.REF.		POZN.	Č. KUSOVNÍKU
PŘEKR. Ošlejšek 2.9.2025				
TECHNOL.	SCHVÁLIL Ošlejšek	25.11.2024	STARÝ V.	Č.V.

NÁZEV

Motor H2

H2055 10 Z

Listů List