Engineering data (WIN 1214)		
DC bus voltage	560	V DC
Nominal AC voltage	380	V AC (rms)
Rated voltage	288	V AC (rms)
Rated power	2.4	kW
Rated speed	1000	rpm
Rated torque	23.00	Nm
Rated current	5.83	A (rms)
Peak torque	72	Nm
Peak current	19.1	A (rms)
Stall torque	24	Nm
Stall current	5.6	A (rms)
No load speed	1450	rpm
EMF constant ±10%	261	V AC (rms) / 1000rpm
Theoretical torque constant ±10%	4.317	Nm / A (rms)
Torque constant ±10% @ rated load	3.945	Nm / A (rms)
Number of poles	10	
Electrical time constant	8.98	ms
Winding terminal resistance	3.486	Ω
Rotary field terminal inductance	31.3	mH

Customs info	
HS Code	85015220

Mechanical data (setting 48)		
Max mechanical speed	9000	rpm
Mech. time constant	0.61	ms
Thermal time constant	75	min
Rotor inertia	18.7	kgcm²
Protection	IP64	
Color	RAL 9005	
Cooling	Convection	
Max. axial force 20kh	211	N
Max. radial force 20kh*	1110	N
Max. axial force 100kh	123	N
Max. radial force 100kh*	649	N

** Defined for point of action at ½ output shaft length*

Sensors	
Temperature	PT1000 {PT1000}
Feedback	EKS36 (HDSL) single-turn, 17 bits

Torque / speed curve

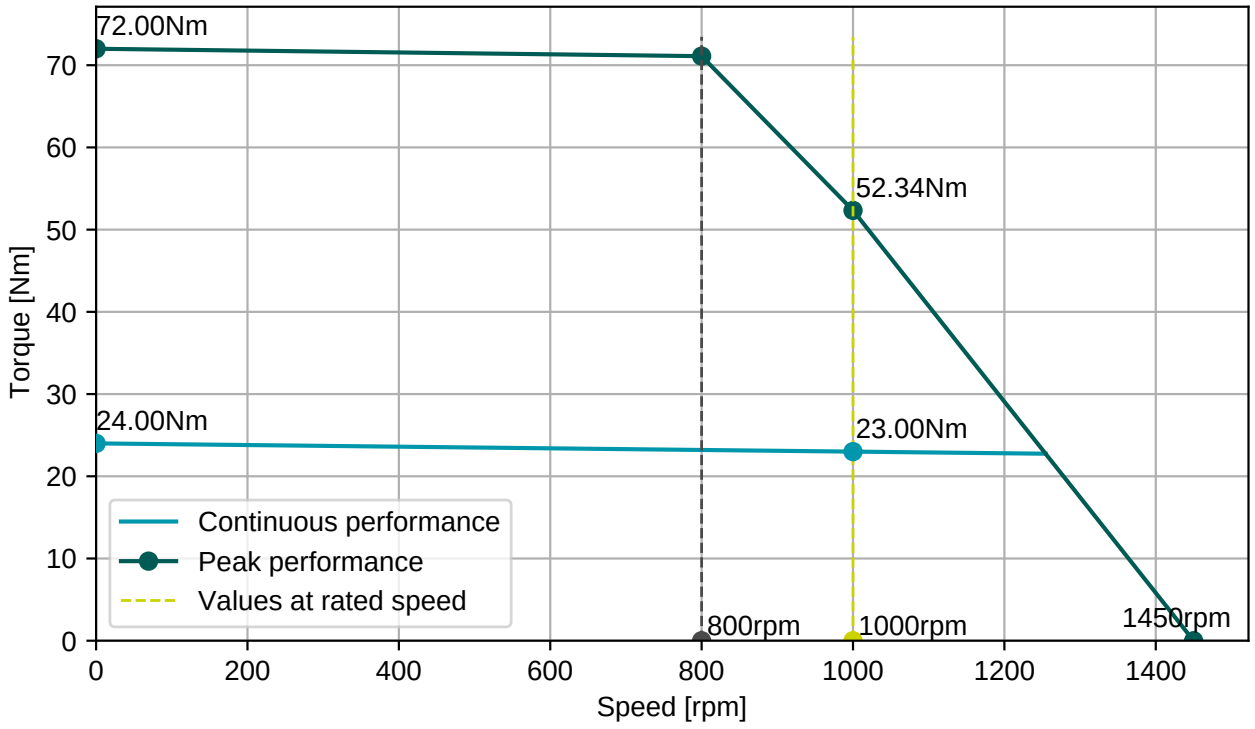

BGC110N00001216000

M23, 8 poles, rotary

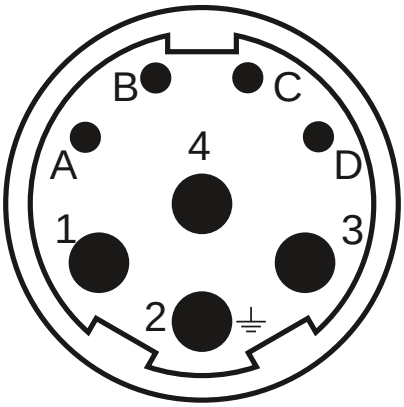

Connector 1 (283)	
1	U
4	V
3	W
2	PE
A	Brake+
B	Brake-
C	GND/DSL-
D	+Us/DSL+

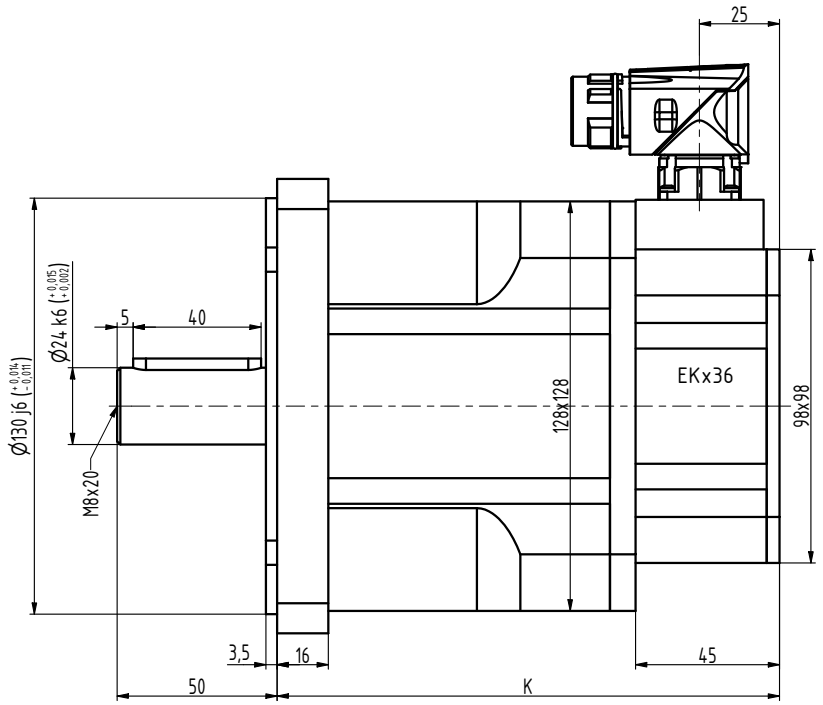

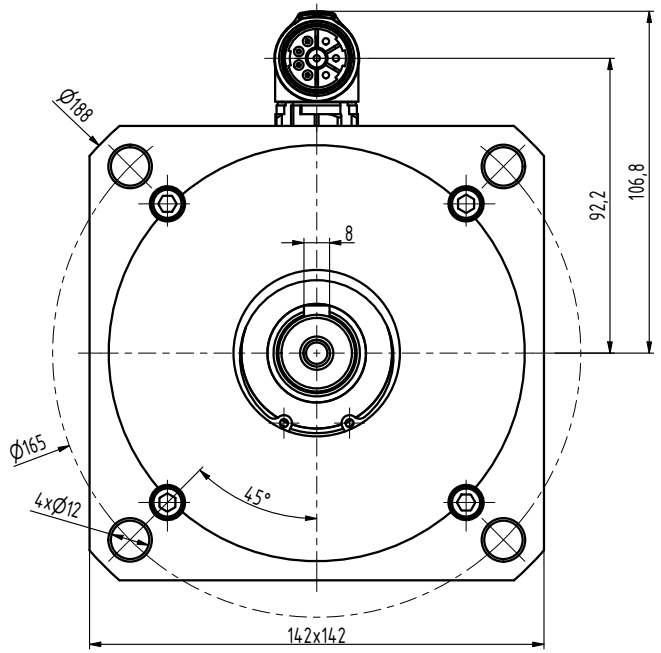

TYP	K
N5-0650	127
N5-1200	157
N5-1600	187
N5-2000	217
N5-2400	247

INDEX	ZMĚNA	DATUM	PODPIS		
ZN.MAT.			T.O.	HMOTNOST kg	MĚŘ.
ROZM.-POLOT.					
POM. ZAŘ.				ČSN	TŘ.Č.
VYPR. Ošlejšek		NORM.REF.		POZN.	Č. KUSOVNÍKU
PŘEKR.					
TECHNOL.		SCHVÁLIL Ošlejšek	11.09.2021	STARÝ V.	Č.V.

NÁZEV

Motor N5

N5087 10 P Z_S4_S1

Listů List