Engineering data (WIN 707)		
DC bus voltage	560	V DC
Nominal AC voltage	380	V AC (rms)
Rated voltage	278	V AC (rms)
Rated power	942	W
Rated speed	3000	rpm
Rated torque	3.00	Nm
Rated current	2.42	A (rms)
Peak torque	10.5	Nm
Peak current	10.9	A (rms)
Stall torque	3.5	Nm
Stall current	2.38	A (rms)
No load speed	4260	rpm
EMF constant ±10%	89	V AC (rms) / 1000rpm
Theoretical torque constant ±10%	1.47	Nm / A (rms)
Torque constant ±10% @ rated load	1.24	Nm / A (rms)
Number of poles	10	
Electrical time constant	2.87	ms
Winding terminal resistance	8.89	Ω
Rotary field terminal inductance	25.5	mH

Customs info	
HS Code	85015220

Mechanical data (setting 5)		
Max mechanical speed	12000	rpm
Mech. time constant	0.74	ms
Thermal time constant	27	min
Rotor inertia	1.04	kgcm²
Protection	IP64	
Color	RAL 9005	
Cooling	Convection	
Max. axial force 20kh	75	N
Max. radial force 20kh*	393	N
Max. axial force 100kh	44	N
Max. radial force 100kh*	230	N

** Defined for point of action at ½ output shaft length*

Sensors	
Temperature	PTC 111-K13 {PTC 111-K13 Reissmann}
Feedback	2-pole resolver (ER5Kd411, TS2620N21E11, RE-15-1-A15)

Torque / speed curve

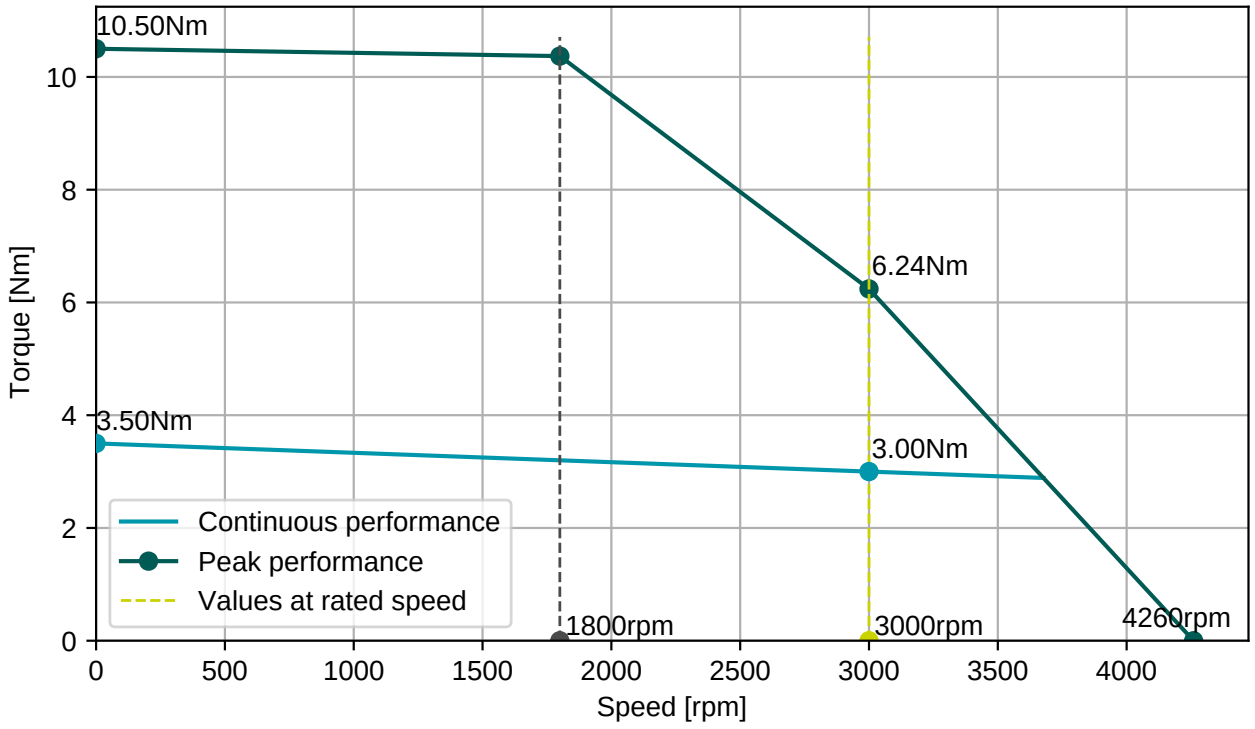

BGC110N00001216000
M23, 8 poles, rotary

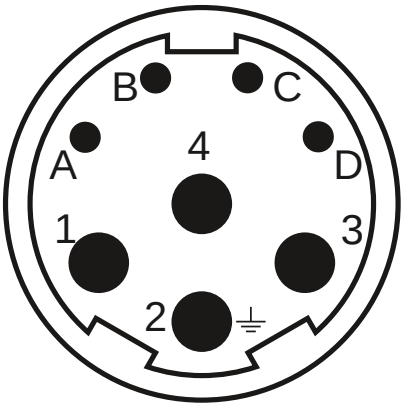

AGC052N00001215000
M23, 12 poles, rotary

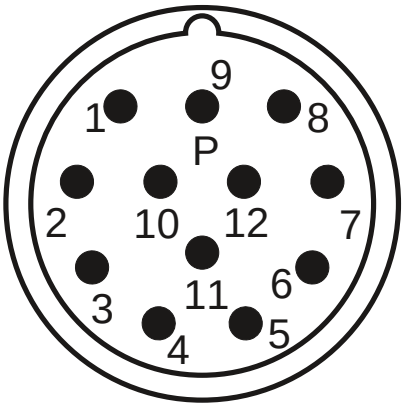

Connector 1 (9)	
1	U
4	V
3	W
2	PE
A	Brake+
B	Brake-
C	
D	

Connector 2 (10)	
2	Therm+
3	S4
4	S3
5	R2
6	Therm-
7	S2
8	S1
9	R1

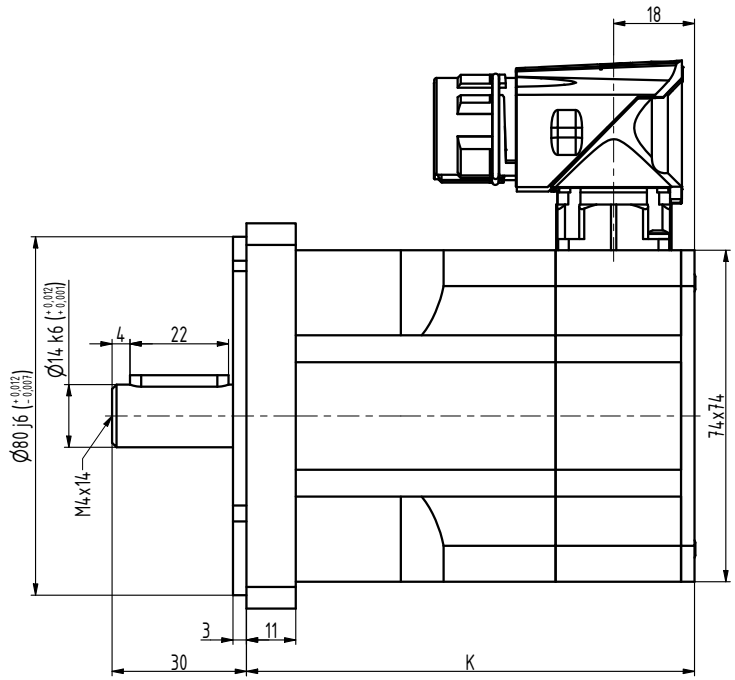

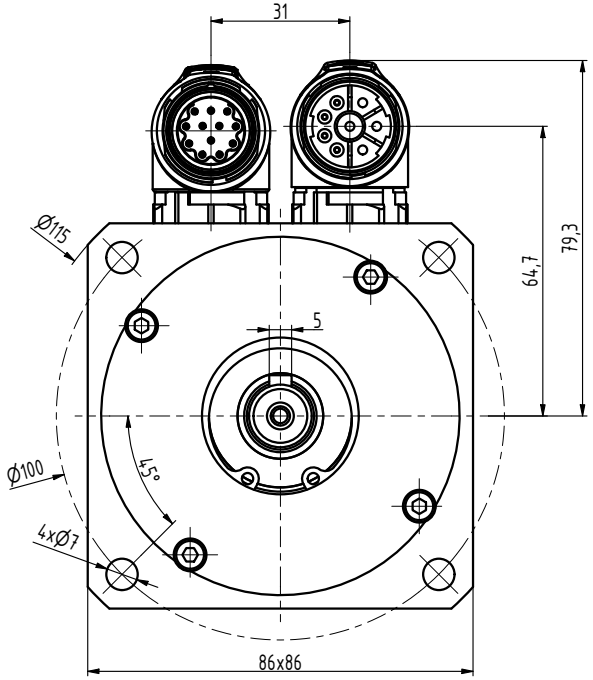

TYP	K
N3-0115	82
N3-0205	100
N3-0280	118
N3-0350	136
N3-0420	154
N3-0480	172

INDEX	ZMĚNA	DATUM	PODPIS		
ZN.MAT.			T.O.	HMOTNOST kg	MĚŘ.
ROZM.-POLOT.					
POM. ZAŘ.				ČSN	TŘ.Č.
VYPR. Ošlejšek		NORM.REF.		POZN.	Č. KUSOVNÍKU
PŘEKR. Ošlejšek 28.5.2021					
TECHNOL.		SCHVÁLIL Ošlejšek	06.02.2014	STARÝ V.	Č.V.
NÁZEV					
Motor N3				N3111 00 P Z_S4_S1	
				Listů	List