Engineering data (WIN 1162)		
DC bus voltage	48	V DC
Nominal AC voltage	33	V AC (rms)
Rated voltage	27	V AC (rms)
Rated power	565	W
Rated speed	3000	rpm
Rated torque	1.80	Nm
Rated current	15.9	A (rms)
Peak torque	6.15	Nm
Peak current	63.5	A (rms)
Stall torque	1.9	Nm
Stall current	14.5	A (rms)
No load speed	4150	rpm
EMF constant ±10%	7.91	V AC (rms) / 1000rpm
Theoretical torque constant ±10%	0.131	Nm / A (rms)
Torque constant ±10% @ rated load	0.113	Nm / A (rms)
Number of poles	10	
Electrical time constant	2.25	ms
Winding terminal resistance	0.187	Ω
Rotary field terminal inductance	0.42	mH

Customs info	
HS Code	85015100

Mechanical data (setting 48)		
Max mechanical speed	12000	rpm
Mech. time constant	1.04	ms
Thermal time constant	23	min
Rotor inertia	0.55	kgcm²
Protection	IP64	
Color	RAL 9005	
Cooling	Convection	
Max. axial force 20kh	70	N
Max. radial force 20kh*	369	N
Max. axial force 100kh	41	N
Max. radial force 100kh*	216	N

** Defined for point of action at ½ output shaft length*

Sensors	
Temperature	PT1000 {PT1000}
Feedback	EEM37 (HDSL) multi-turn, 17+12 bits

Torque / speed curve

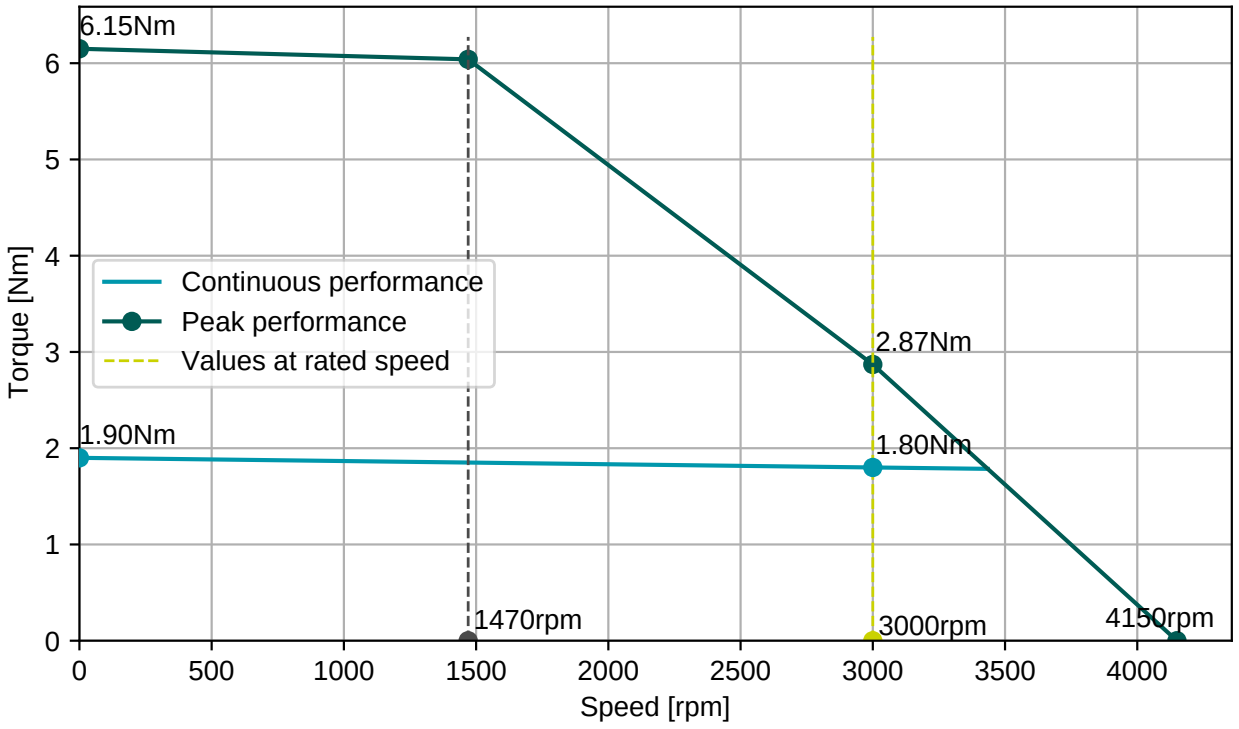

Cable DSL4x2,5 (2x0,25), D=11,7±0,4mm

Connector 1 (306)	
1	U
2	V
3	W
PE	PE
5	Brake+
6	Brake-
brown	+Us/DSL+
white	GND/DSL-

Numbers printed on the cables

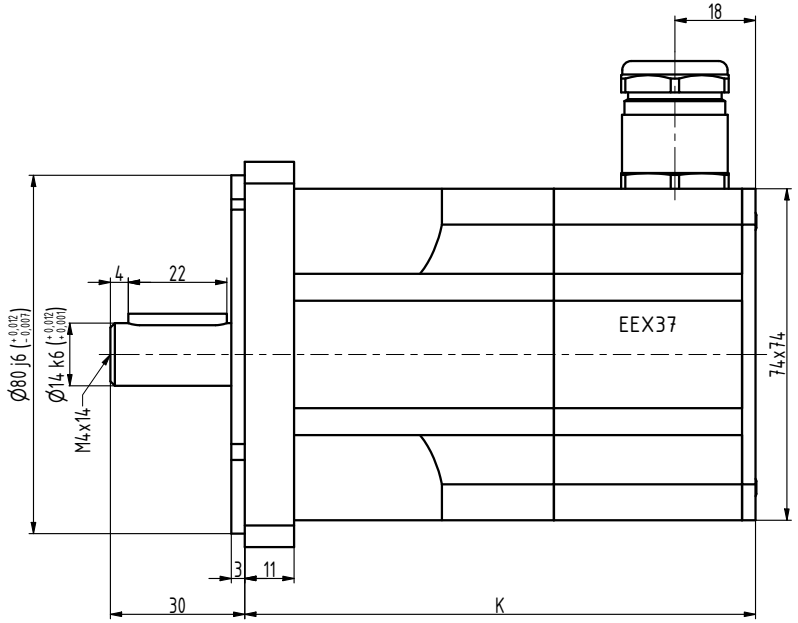

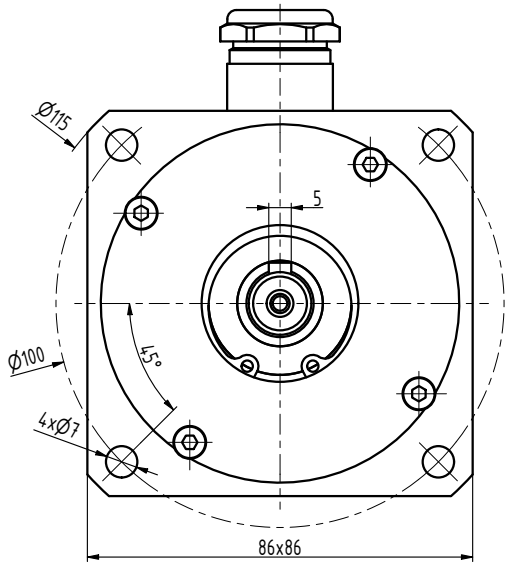

TYP	K
N3-0115	96
N3-0205	114
N3-0280	132
N3-0350	150
N3-0420	168
N3-0480	186

INDEX	ZMĚNA	DATUM	PODPIS		
ZN.MAT.			T.O.	HMOTNOST kg	MĚŘ.
ROZM.-POLOT.					
POM. ZAŘ.				ČSN	TŘ.Č.
VYPR. Ošlejšek		NORM.REF.		POZN.	Č. KUSOVNÍKU
PŘEKR.					
TECHNOL.		SCHVÁLIL Ošlejšek	06.05.2021	STARÝ V.	Č.V.
NÁZEV	Motor N3			N3133 05 P Z	
				Listů	List