Engineering data (WIN 749)		
DC bus voltage	320	V DC
Nominal AC voltage	220	V AC (rms)
Rated voltage	182	V AC (rms)
Rated power	942	W
Rated speed	5000	rpm
Rated torque	1.80	Nm
Rated current	4.01	A (rms)
Peak torque	6.15	Nm
Peak current	14.3	A (rms)
Stall torque	2.05	Nm
Stall current	3.54	A (rms)
No load speed	6260	rpm
EMF constant ±10%	35	V AC (rms) / 1000rpm
Theoretical torque constant ±10%	0.58	Nm / A (rms)
Torque constant ±10% @ rated load	0.45	Nm / A (rms)
Number of poles	10	
Electrical time constant	2.53	ms
Winding terminal resistance	3.24	Ω
Rotary field terminal inductance	8.2	mH

Customs info	
HS Code	85015220

Mechanical data (setting 5)		
Max mechanical speed	12000	rpm
Mech. time constant	0.92	ms
Thermal time constant	23	min
Rotor inertia	0.55	kgcm²
Protection	IP64	
Color	RAL 9005	
Cooling	Convection	
Max. axial force 20kh	59	N
Max. radial force 20kh*	311	N
Max. axial force 100kh	35	N
Max. radial force 100kh*	182	N

** Defined for point of action at ½ output shaft length*

Sensors	
Temperature	PTC 111-K13 {PTC 111-K13 Reissmann}
Feedback	2-pole resolver (ER5Kd411, TS2620N21E11, RE-15-1-A15)

Torque / speed curve

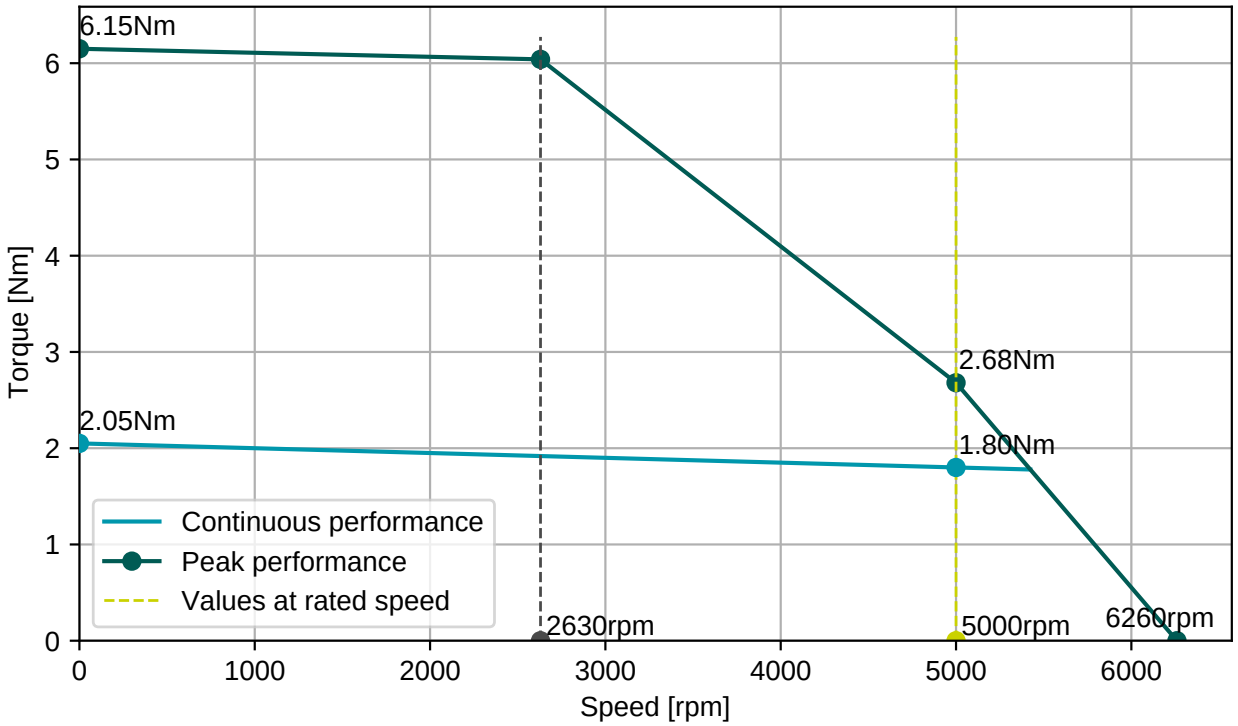

EGA101N00000001000

2x M15, 9 and 12 poles rotary

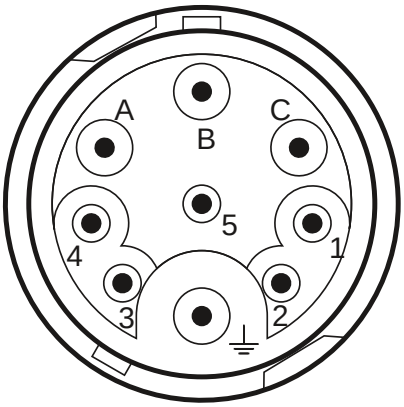

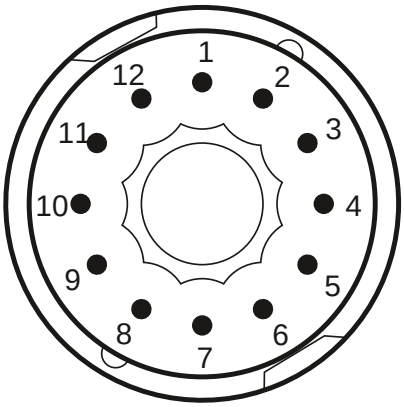

Connector 1 (226)	
A	U
B	V
C	W
PE	PE
1	Brake+
2	Brake-

Connector 2 (227)	
2	Therm+
3	S4
4	S3
5	R2
6	Therm-
7	S2
8	S1
9	R1

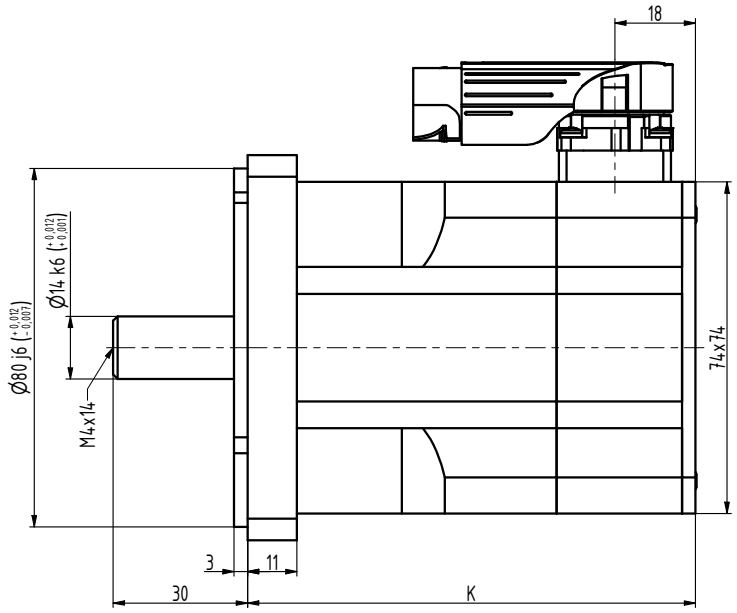

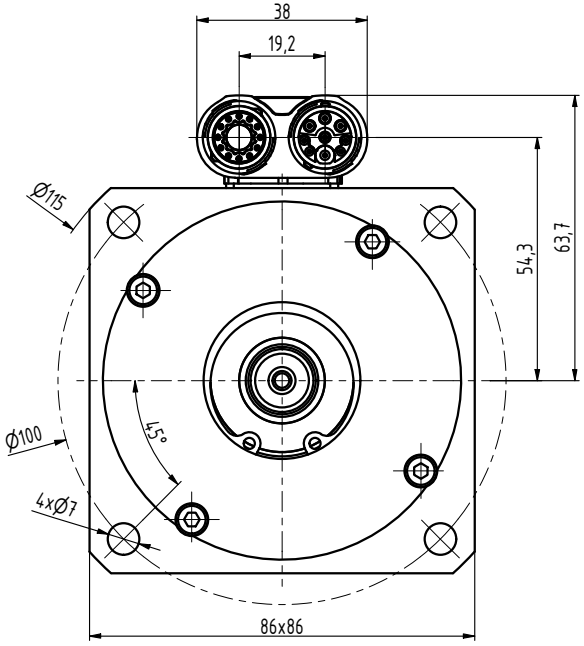

TYP	K
N3-0115	82
N3-0205	100
N3-0280	118
N3-0350	136
N3-0420	154
N3-0480	172

INDEX	ZMĚNA	DATUM	PODPIS		
ZN.MAT.			T.O.	HMOTNOST kg	MĚŘ.
ROZM.-POLOT.					
POM. ZAŘ.				ČSN	TŘ.Č.
VYPR. Ošlejšek		NORM.REF.		POZN.	Č. KUSOVNÍKU
PŘEKR. Ošlejšek 30.05.2021					
TECHNOL.		SCHVÁLIL Ošlejšek	22.07.2010	STARÝ V.	Č.V.

NÁZEV
Motor N3

N3111 05 Z_Y_S1

Listů List