Engineering data (WIN 770)		
DC bus voltage	560	V DC
Nominal AC voltage	380	V AC (rms)
Rated voltage	266	V AC (rms)
Rated power	1.1	kW
Rated speed	1500	rpm
Rated torque	6.80	Nm
Rated current	3.1	A (rms)
Peak torque	22.5	Nm
Peak current	12.8	A (rms)
Stall torque	7.5	Nm
Stall current	2.98	A (rms)
No load speed	2480	rpm
EMF constant ±10%	152	V AC (rms) / 1000rpm
Theoretical torque constant ±10%	2.51	Nm / A (rms)
Torque constant ±10% @ rated load	2.19	Nm / A (rms)
Number of poles	10	
Electrical time constant	5.82	ms
Winding terminal resistance	7.01	Ω
Rotary field terminal inductance	40.8	mH

Customs info	
HS Code	85015220

Mechanical data (setting 5)		
Max mechanical speed	9000	rpm
Mech. time constant	0.63	ms
Thermal time constant	30	min
Rotor inertia	3.26	kgcm²
Protection	IP64	
Color	RAL 9005	
Cooling	Convection	
Max. axial force 20kh	158	N
Max. radial force 20kh*	831	N
Max. axial force 100kh	92	N
Max. radial force 100kh*	486	N

** Defined for point of action at ½ output shaft length*

Sensors	
Temperature	PTC 111-K13 {PTC 111-K13 Reissmann}
Feedback	2-pole resolver (ER5Kd411, TS2620N21E11, RE-15-1-A15)

Brake		
Braking torque	9.00	Nm
Voltage	24	V DC
Power @20°C	18.0	W
Current @20°C	0.75	A
Inertia	0.60	kgcm²
Mass	0.82	kg

Torque / speed curve

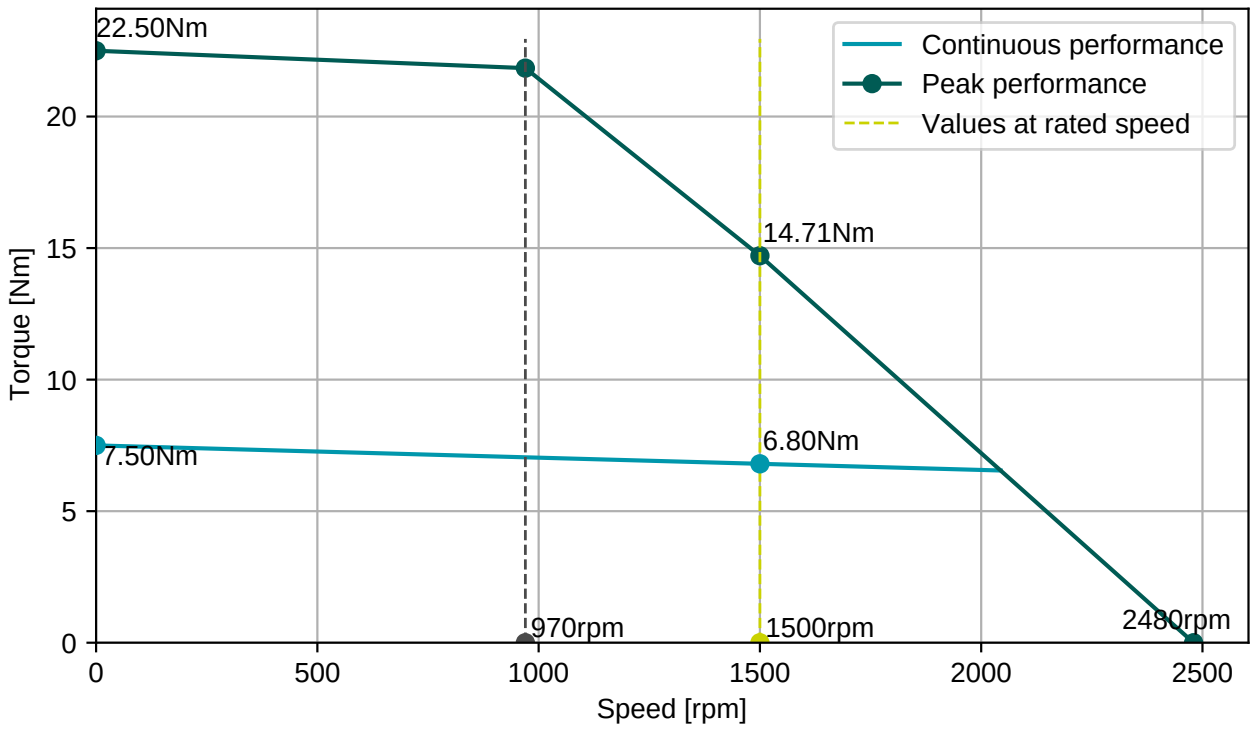

BGC110N00001216000
M23, 8 poles, rotary

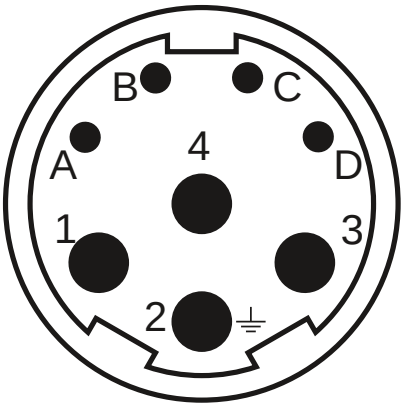

AGC052N00001215000
M23, 12 poles, rotary

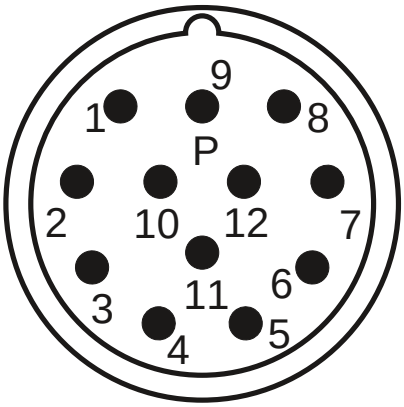

Connector 1 (9)	
1	U
4	V
3	W
2	PE
A	Brake+
B	Brake-
C	
D	

Connector 2 (10)	
2	Therm+
3	S4
4	S3
5	R2
6	Therm-
7	S2
8	S1
9	R1

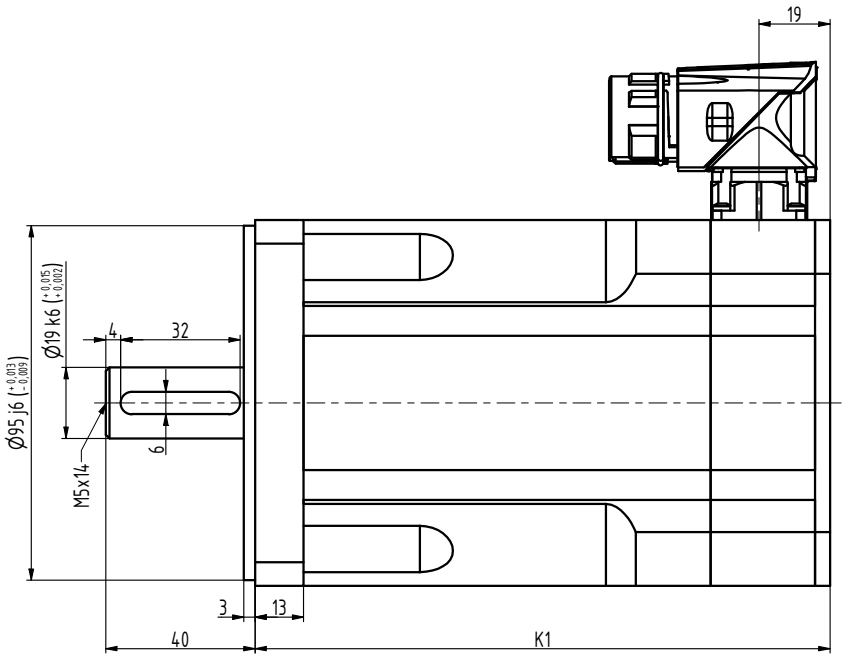

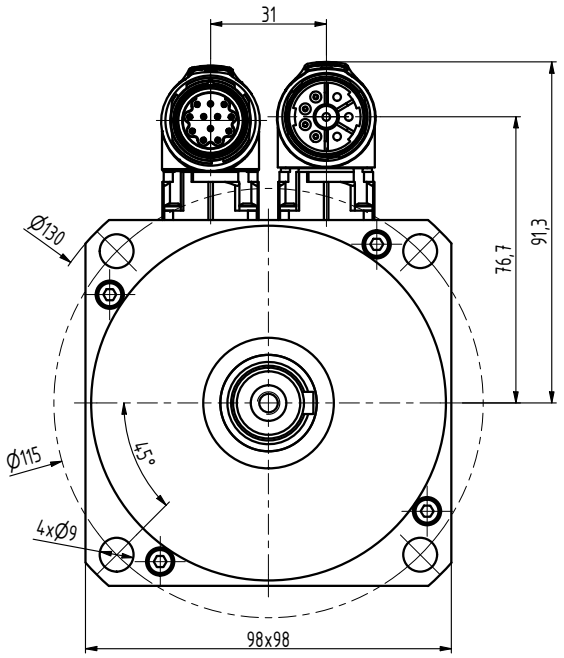

TYP	K1
N4-0340	139
N4-0510	154
N4-0750	184
N4-0960	214
N4-1130	244

INDEX	ZMĚNA	DATUM	PODPIS		
ZN.MAT.			T.O.	HMOTNOST kg	MĚŘ.
ROZM.-POLOT.					
POM. ZAŘ.				ČSN	TŘ.Č.
VYPR. Ošlejšek		NORM.REF.		POZN.	Č. KUSOVNÍKU
PŘEKR.					
TECHNOL.		SCHVÁLIL Ošlejšek	17.09.2020	STARÝ V.	Č.V.

NÁZEV

Motor N4

N4083 00 BP Z_S4_S1

Listů List