Engineering data (WIN 763)		
DC bus voltage	560	V DC
Nominal AC voltage	380	V AC (rms)
Rated voltage	253	V AC (rms)
Rated power	518	W
Rated speed	4500	rpm
Rated torque	1.10	Nm
Rated current	1.76	A (rms)
Peak torque	3.45	Nm
Peak current	6.7	A (rms)
Stall torque	1.15	Nm
Stall current	1.51	A (rms)
No load speed	8200	rpm
EMF constant ±10%	46	V AC (rms) / 1000rpm
Theoretical torque constant ±10%	0.76	Nm / A (rms)
Torque constant ±10% @ rated load	0.62	Nm / A (rms)
Number of poles	10	
Electrical time constant	2.22	ms
Winding terminal resistance	14.34	Ω
Rotary field terminal inductance	31.8	mH

Customs info	
HS Code	85015100

Mechanical data (setting 5)		
Max mechanical speed	12000	rpm
Mech. time constant	1.33	ms
Thermal time constant	21	min
Rotor inertia	0.31	kgcm²
Protection	IP64	
Color	RAL 9005	
Cooling	Convection	

Sensors	
Temperature	PTC 111-K13 {PTC 111-K13 Reissmann}
Feedback	2-pole resolver (ER5Kd411, TS2620N21E11, RE-15-1-A15)

Brake		
Braking torque	4.50	Nm
Voltage	24	V DC
Power @20°C	12.0	W
Current @20°C	0.50	A
Inertia	0.20	kgcm²
Mass	0.47	kg

Torque / speed curve

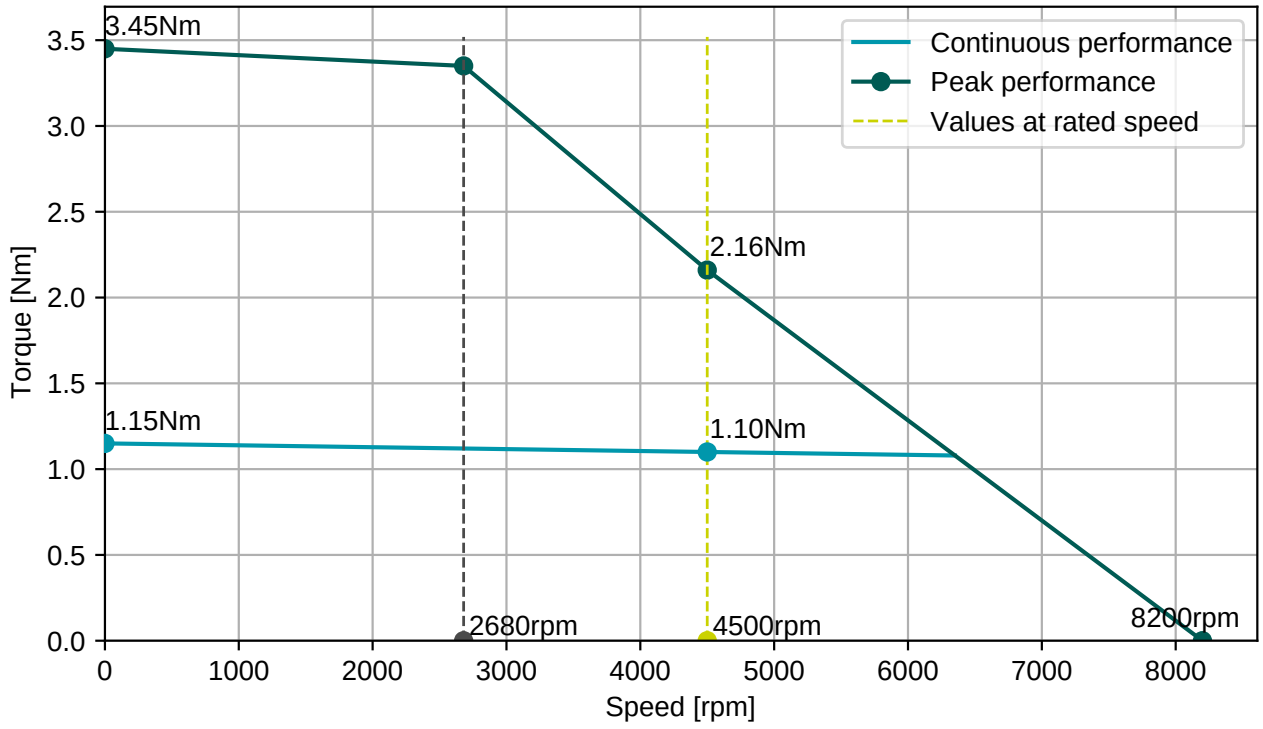

BGC110N00001216000
M23, 8 poles, rotary

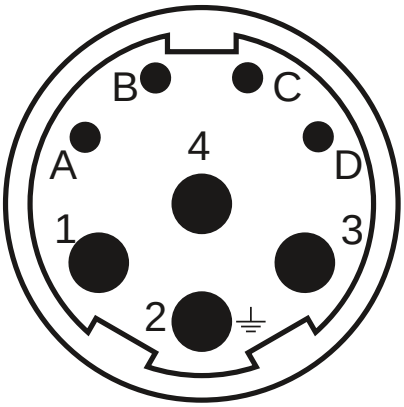

AGC052N00001215000
M23, 12 poles, rotary

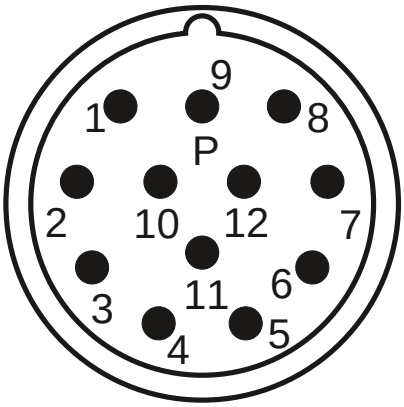

Connector 1 (9)	
1	U
4	V
3	W
2	PE
A	Brake+
B	Brake-
C	
D	

Connector 2 (10)	
2	Therm+
3	S4
4	S3
5	R2
6	Therm-
7	S2
8	S1
9	R1

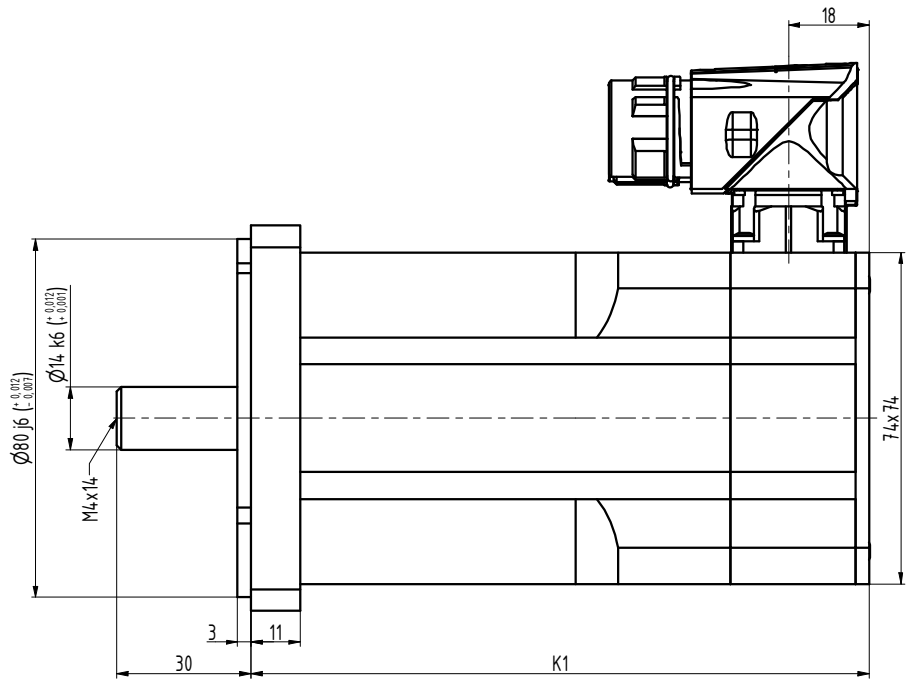

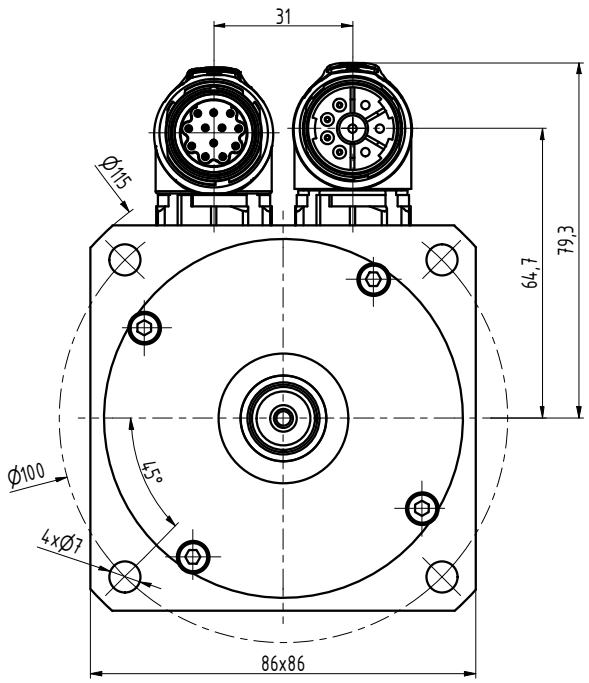

TYP	K1
N3-0115	120
N3-0205	138
N3-0280	156
N3-0350	174
N3-0420	192
N3-0480	210

INDEX	ZMĚNA	DATUM	PODPIS

ZN.MAT.			T.O.	HMOTNOST kg	MĚŘ.
ROZM.-POLOT.					
POM. ZAŘ.				ČSN	TŘ.Č.
VYPR. Ošlejšek	NORM.REF.			POZN.	Č. KUSOVNÍKU
PŘEKR. Ošlejšek 28.5.2021					
TECHNOL.	SCHVÁLIL Ošlejšek	16.10.2009		STARÝ V.	Č.V.

NÁZEV
Motor N3

N3111 00 B Z_S4_S1

Listů List