Engineering data (WIN 705)		
DC bus voltage	560	V DC
Nominal AC voltage	380	V AC (rms)
Rated voltage	273	V AC (rms)
Rated power	597	W
Rated speed	3000	rpm
Rated torque	1.90	Nm
Rated current	1.72	A (rms)
Peak torque	6.15	Nm
Peak current	7.2	A (rms)
Stall torque	2.05	Nm
Stall current	1.57	A (rms)
No load speed	4790	rpm
EMF constant ±10%	79	V AC (rms) / 1000rpm
Theoretical torque constant ±10%	1.31	Nm / A (rms)
Torque constant ±10% @ rated load	1.10	Nm / A (rms)
Number of poles	10	
Electrical time constant	2.59	ms
Winding terminal resistance	16.4	Ω
Rotary field terminal inductance	42.4	mH

Customs info	
HS Code	85015100

Mechanical data (setting 5)		
Max mechanical speed	12000	rpm
Mech. time constant	0.91	ms
Thermal time constant	23	min
Rotor inertia	0.55	kgcm²
Protection	IP64	
Color	RAL 9005	
Cooling	Convection	
Max. axial force 20kh	70	N
Max. radial force 20kh*	369	N
Max. axial force 100kh	41	N
Max. radial force 100kh*	216	N

** Defined for point of action at ½ output shaft length*

Sensors	
Temperature	PTC 111-K13 {PTC 111-K13 Reissmann}
Feedback	2-pole resolver (ER5Kd411, TS2620N21E11, RE-15-1-A15)

Torque / speed curve

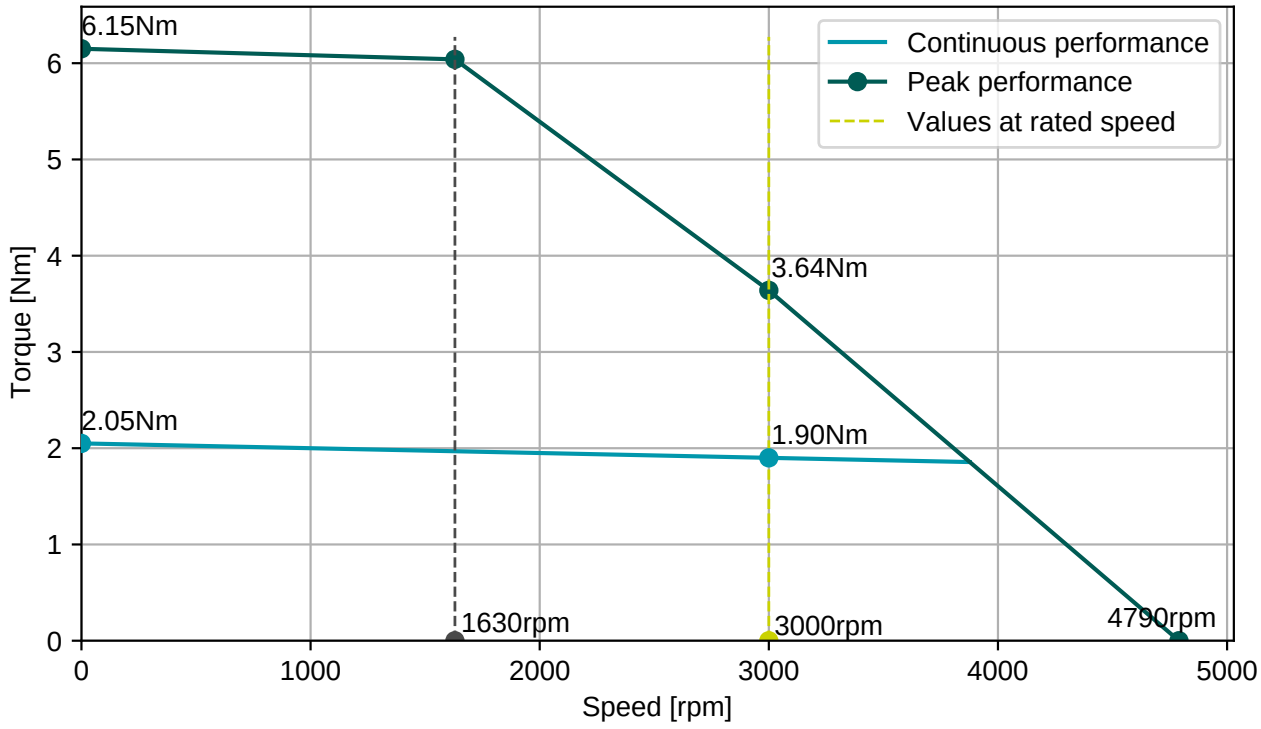

EGA101N00000001000

2x M15, 9 and 12 poles rotary

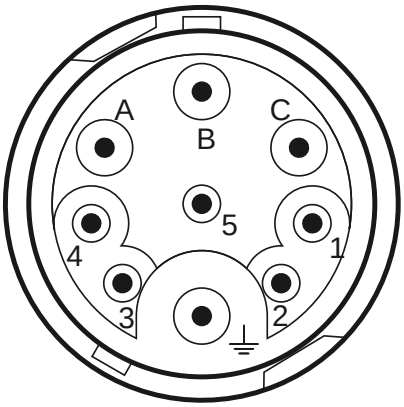

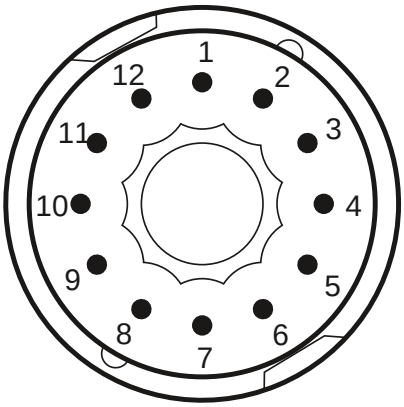

Connector 1 (226)	
A	U
B	V
C	W
PE	PE
1	Brake+
2	Brake-

Connector 2 (227)	
2	Therm+
3	S4
4	S3
5	R2
6	Therm-
7	S2
8	S1
9	R1

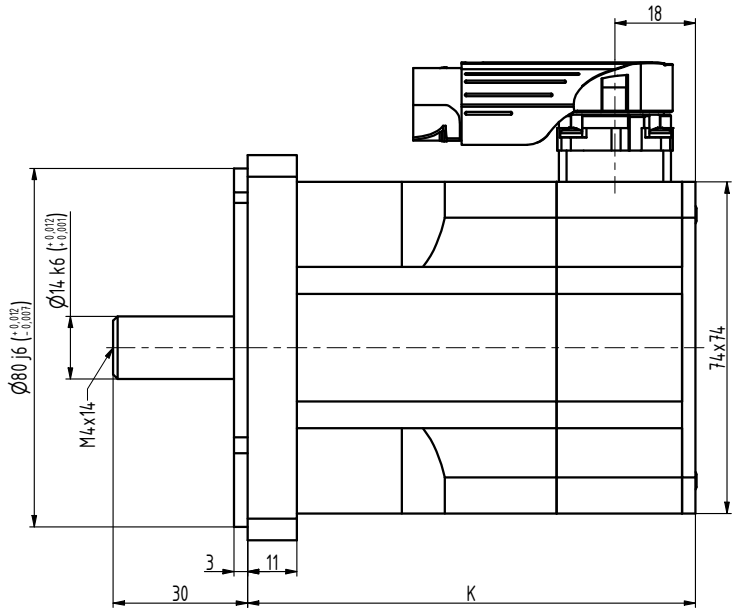

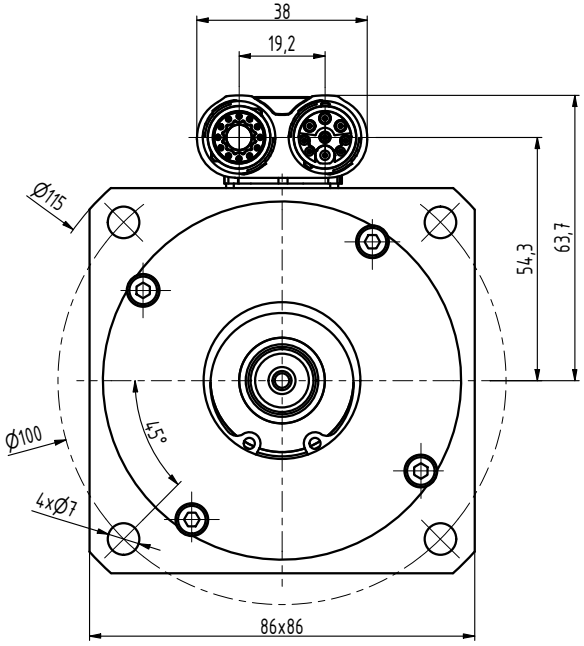

TYP	K
N3-0115	82
N3-0205	100
N3-0280	118
N3-0350	136
N3-0420	154
N3-0480	172

INDEX	ZMĚNA	DATUM	PODPIS		
ZN.MAT.			T.O.	HMOTNOST kg	MĚŘ.
ROZM.-POLOT.					
POM. ZAŘ.				ČSN	TŘ.Č.
VYPR. Ošlejšek		NORM.REF.		POZN.	Č. KUSOVNÍKU
PŘEKR. Ošlejšek 30.05.2021					
TECHNOL.		SCHVÁLIL Ošlejšek	22.07.2010	STARÝ V.	Č.V.

NÁZEV
Motor N3

N3111 05 Z_Y_S1

Listů List