Engineering data (WIN 1084)		
DC bus voltage	560	V DC
Nominal AC voltage	380	V AC (rms)
Rated voltage	276	V AC (rms)
Rated power	1.1	kW
Rated speed	3500	rpm
Rated torque	2.90	Nm
Rated current	2.73	A (rms)
Peak torque	10.5	Nm
Peak current	9.8	A (rms)
Stall torque	3.5	Nm
Stall current	2.71	A (rms)
No load speed	4860	rpm
EMF constant ±10%	78	V AC (rms) / 1000rpm
Theoretical torque constant ±10%	1.29	Nm / A (rms)
Torque constant ±10% @ rated load	1.06	Nm / A (rms)
Number of poles	10	
Electrical time constant	2.88	ms
Winding terminal resistance	6.85	Ω
Rotary field terminal inductance	19.7	mH

Customs info	
HS Code	85015220

Mechanical data (setting 48)		
Max mechanical speed	12000	rpm
Mech. time constant	0.74	ms
Thermal time constant	27	min
Rotor inertia	1.04	kgcm²
Protection	IP64	
Color	RAL 9005	
Cooling	Convection	
Max. axial force 20kh	71	N
Max. radial force 20kh*	374	N
Max. axial force 100kh	42	N
Max. radial force 100kh*	219	N

** Defined for point of action at ½ output shaft length*

Sensors	
Temperature	PT1000 {PT1000}
Feedback	EKM36 (HDSL) multi-turn, 17 + 12 bits

Brake		
Braking torque	4.50	Nm
Voltage	24	V DC
Power @20°C	12.0	W
Current @20°C	0.50	A
Inertia	0.20	kgcm²
Mass	0.47	kg

Torque / speed curve

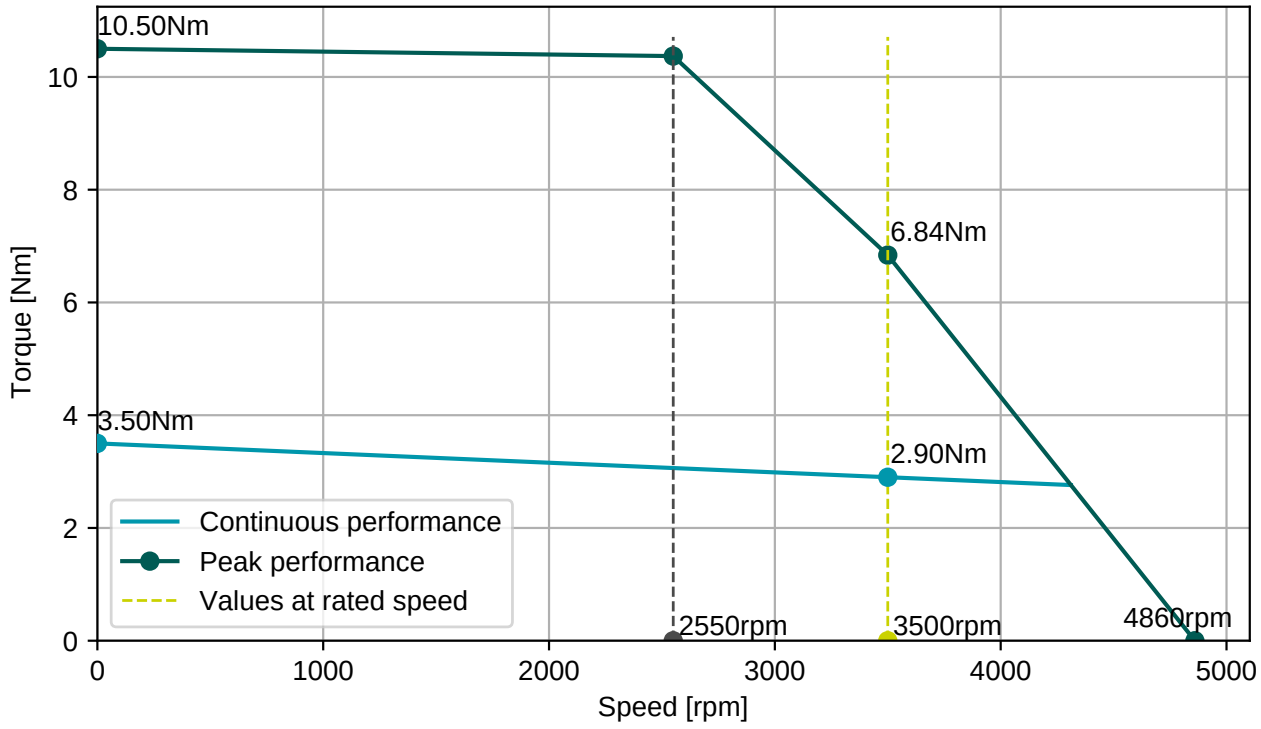

BGC110N00001216000

M23, 8 poles, rotary

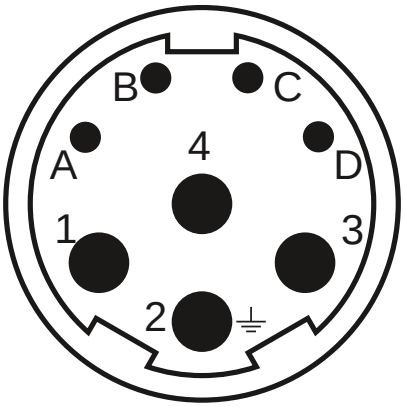

Connector 1 (283)	
1	U
4	V
3	W
2	PE
A	Brake+
B	Brake-
C	GND/DSL-
D	+Us/DSL+

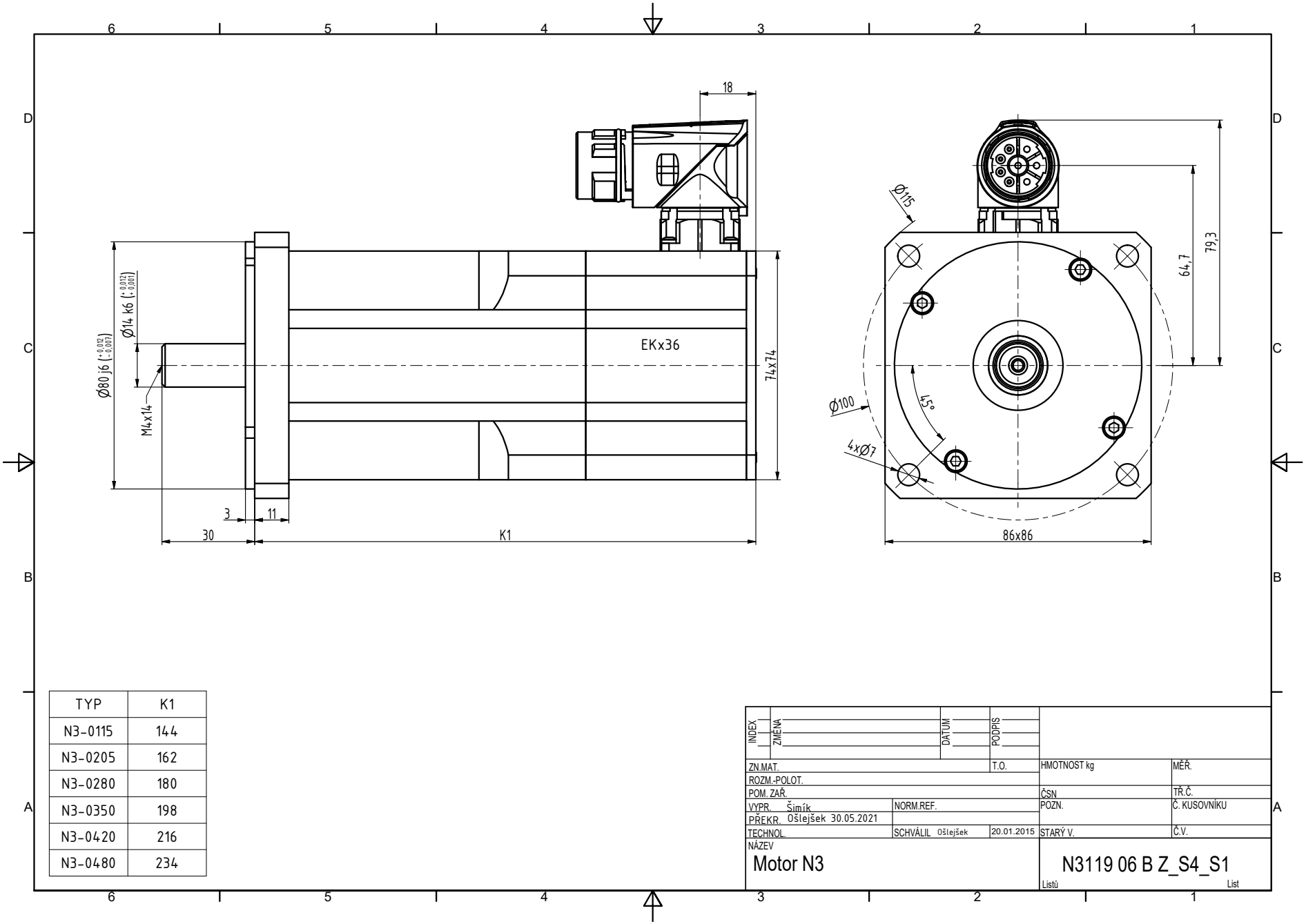

TYP	K1
N3-0115	144
N3-0205	162
N3-0280	180
N3-0350	198
N3-0420	216
N3-0480	234

INDEX	ZMĚNA	DATUM	PODPIS

ZN.MAT.		T.O.	HMOTNOST kg	MĚŘ.	
ROZM.-POLOT.					
POM. ZAŘ.			ČSN	TŘ.Č.	
VYPR. Šimík	NORM.REF.		POZN.	Č. KUSOVNÍKU	
PŘEKR. Ošlejšek 30.05.2021					
TECHNOL.	SCHVÁLIL Ošlejšek	20.01.2015	STARÝ V.	Č.V.	

NÁZEV
Motor N3

N3119 06 B Z_S4_S1

Listů List