Engineering data (WIN 908)		
DC bus voltage	560	V DC
Nominal AC voltage	380	V AC (rms)
Rated voltage	256	V AC (rms)
Rated power	4.1	kW
Rated speed	4000	rpm
Rated torque	9.80	Nm
Rated current	11.67	A (rms)
Peak torque	36	Nm
Peak current	42.5	A (rms)
Stall torque	12	Nm
Stall current	11.5	A (rms)
No load speed	6020	rpm
EMF constant ±10%	63	V AC (rms) / 1000rpm
Theoretical torque constant ±10%	1.04	Nm / A (rms)
Torque constant ±10% @ rated load	0.84	Nm / A (rms)
Number of poles	10	
Electrical time constant	7.85	ms
Winding terminal resistance	0.65	Ω
Rotary field terminal inductance	5.1	mH

Customs info	
HS Code	85015220

Mechanical data (setting 5)		
Max mechanical speed	9000	rpm
Mech. time constant	0.82	ms
Thermal time constant	45	min
Rotor inertia	7.9	kgcm²
Protection	IP64	
Color	RAL 9005	
Cooling	Convection	
Max. axial force 20kh	115	N
Max. radial force 20kh*	604	N
Max. axial force 100kh	67	N
Max. radial force 100kh*	353	N

** Defined for point of action at ½ output shaft length*

Sensors	
Temperature	PTC 111-K13 {PTC 111-K13 Reissmann}
Feedback	2-pole resolver (ER5Kd411, TS2620N21E11, RE-15-1-A15)

Torque / speed curve

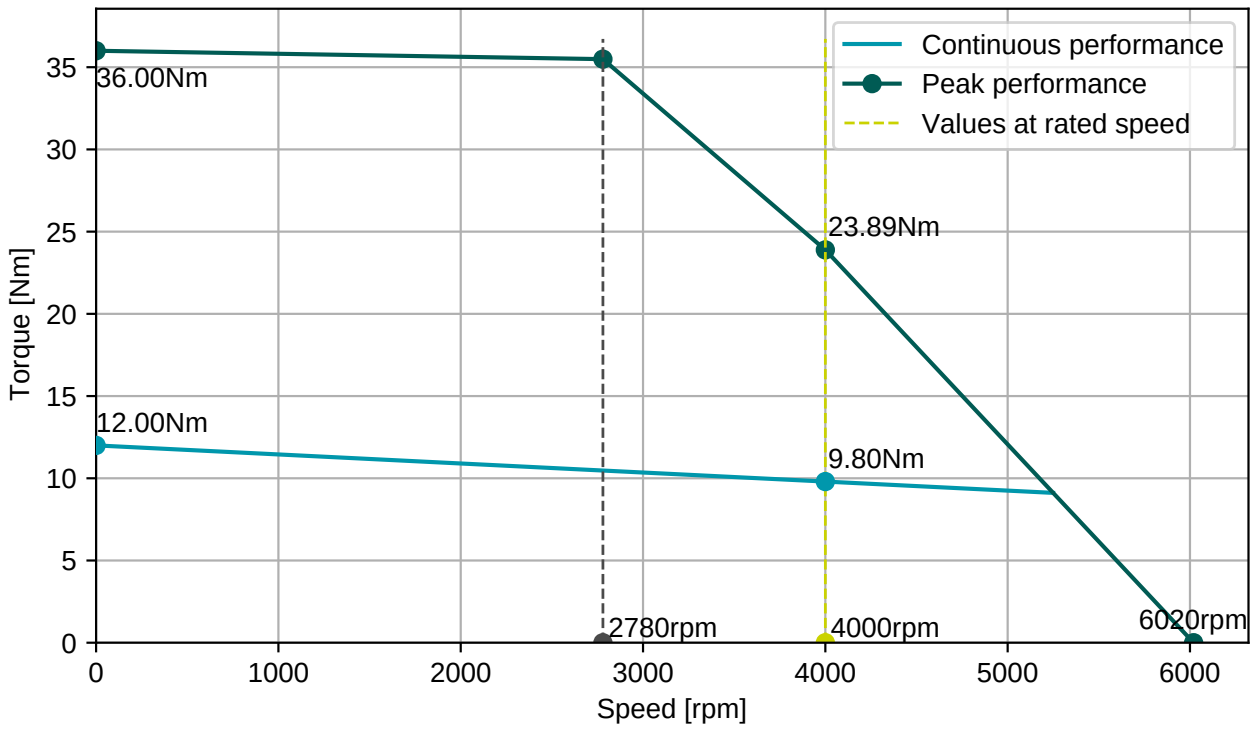

BGC110N00001216000
M23, 8 poles, rotary

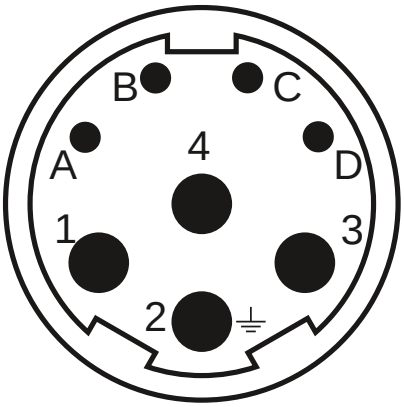

AGC052N00001215000
M23, 12 poles, rotary

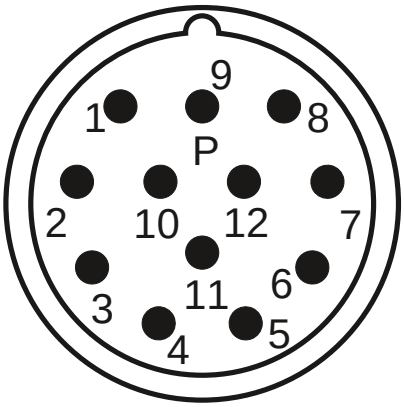

Connector 1 (9)	
1	U
4	V
3	W
2	PE
A	Brake+
B	Brake-
C	
D	

Connector 2 (10)	
2	Therm+
3	S4
4	S3
5	R2
6	Therm-
7	S2
8	S1
9	R1

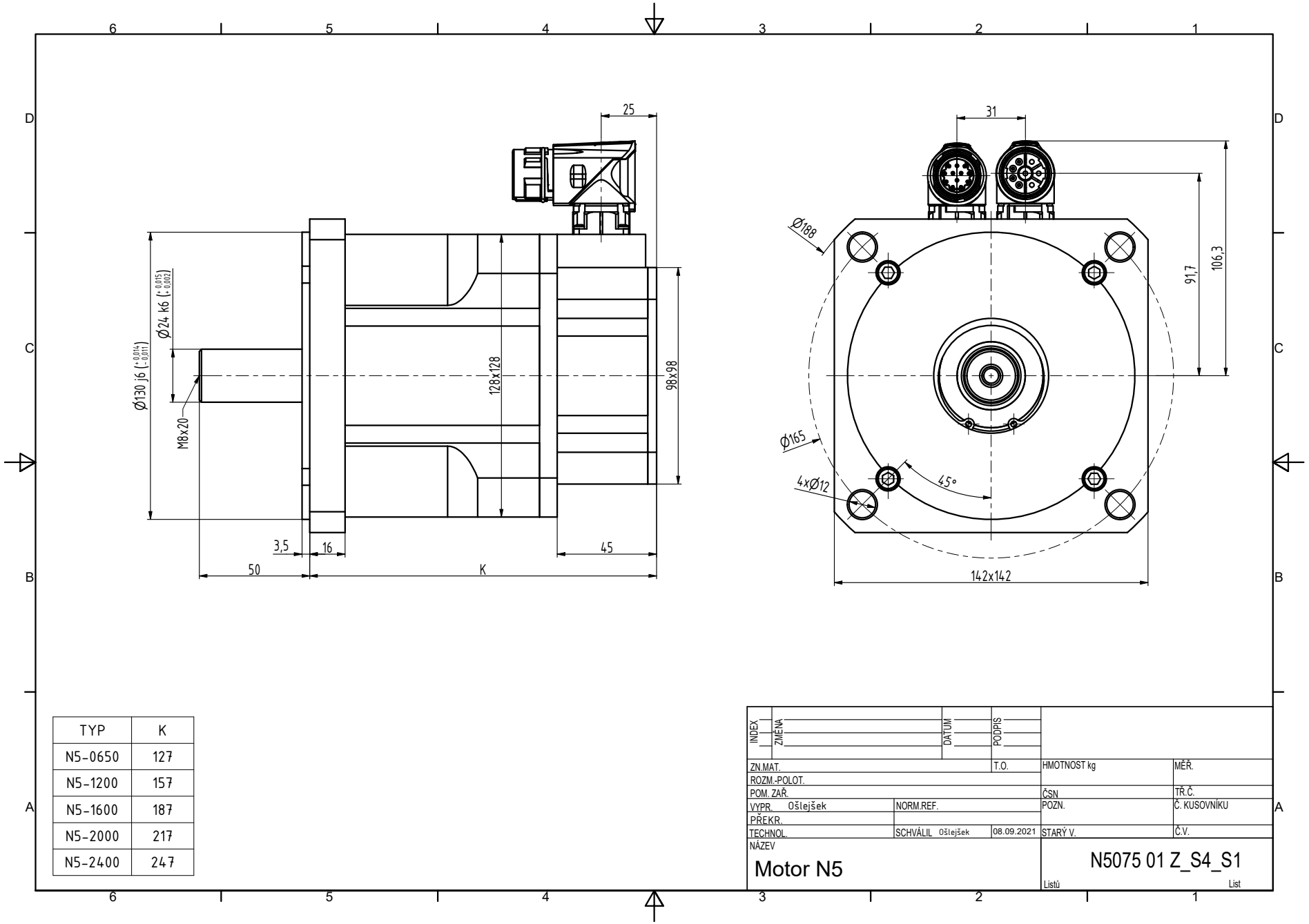

TYP	K
N5-0650	127
N5-1200	157
N5-1600	187
N5-2000	217
N5-2400	247

INDEX	ZMĚNA	DATUM	PODPIS		
ZN.MAT.			T.O.	HMOTNOST kg	MĚŘ.
ROZM.-POLOT.					
POM. ZAŘ.				ČSN	TŘ.Č.
VYPR. Ošlejšek		NORM.REF.		POZN.	Č. KUSOVNÍKU
PŘEKR.					
TECHNOL.		SCHVÁLIL Ošlejšek	08.09.2021	STARÝ V.	Č.V.

NÁZEV

Motor N5

N5075 01 Z_S4_S1

Listů List