Engineering data (WIN 1526)		
DC bus voltage	560	V DC
Nominal AC voltage	380	V AC (rms)
Rated voltage	273	V AC (rms)
Rated power	2.1	kW
Rated speed	6000	rpm
Rated torque	3.40	Nm
Rated current	6.41	A (rms)
Peak torque	15.3	Nm
Peak current	30.8	A (rms)
Stall torque	5.1	Nm
Stall current	6.8	A (rms)
No load speed	8310	rpm
EMF constant ±10%	45.5	V AC (rms) / 1000rpm
Theoretical torque constant ±10%	0.75	Nm / A (rms)
Torque constant ±10% @ rated load	0.53	Nm / A (rms)
Number of poles	10	
Electrical time constant	5.44	ms
Winding terminal resistance	1.24	Ω
Rotary field terminal inductance	6.75	mH

Customs info	
HS Code	85015220

Mechanical data (setting 48)		
Max mechanical speed	9000	rpm
Mech. time constant	0.77	ms
Thermal time constant	25	min
Rotor inertia	2.04	kgcm²
Protection	IP64	
Color	RAL 9005	
Cooling	Convection	
Max. axial force 20kh	90	N
Max. radial force 20kh*	472	N
Max. axial force 100kh	52	N
Max. radial force 100kh*	276	N

** Defined for point of action at ½ output shaft length*

Sensors	
Temperature	PT1000 {PT1000}
Feedback	EDS35 (HDSL) single-turn, 24 bits

Torque / speed curve

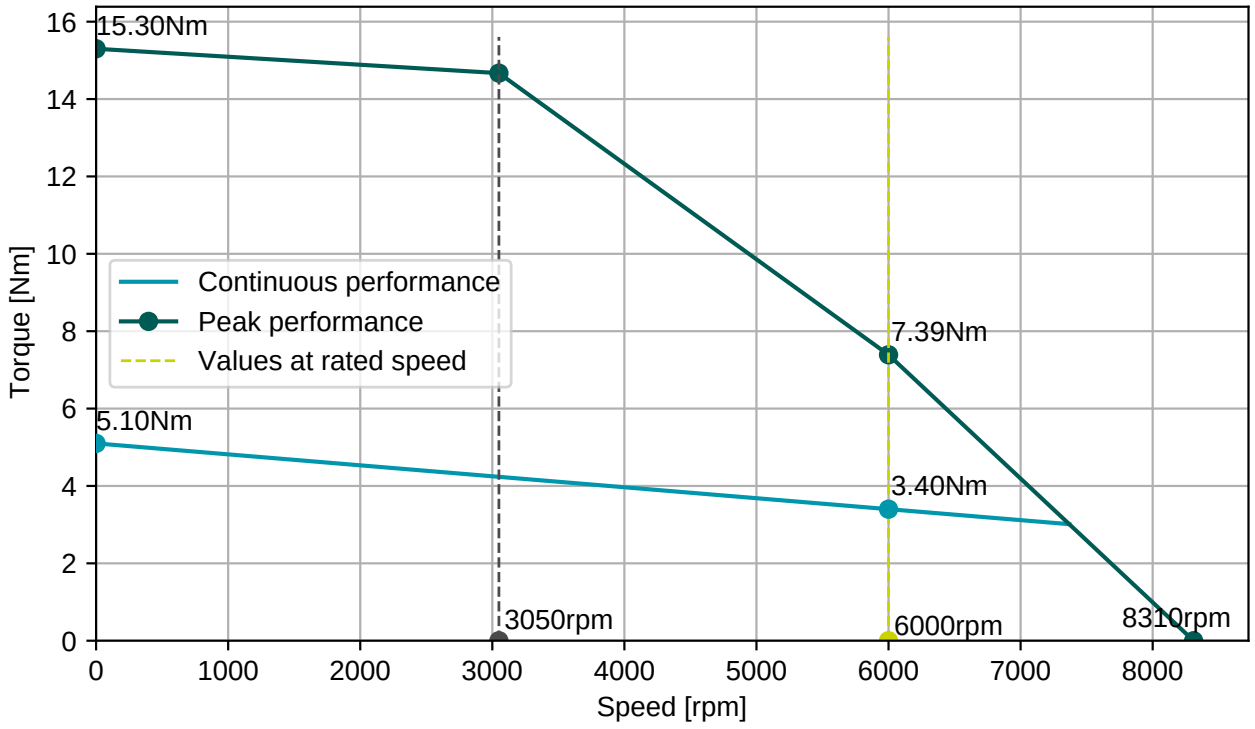

BGC110N00001216000

M23, 8 poles, rotary

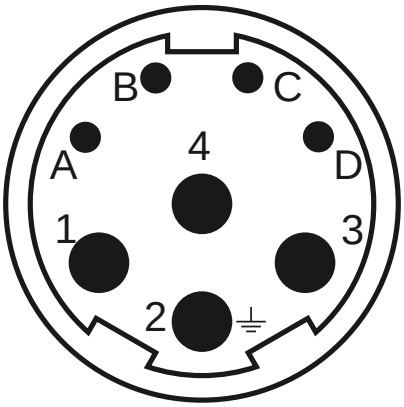

Connector 1 (283)	
1	U
4	V
3	W
2	PE
A	Brake+
B	Brake-
C	GND/DSL-
D	+Us/DSL+

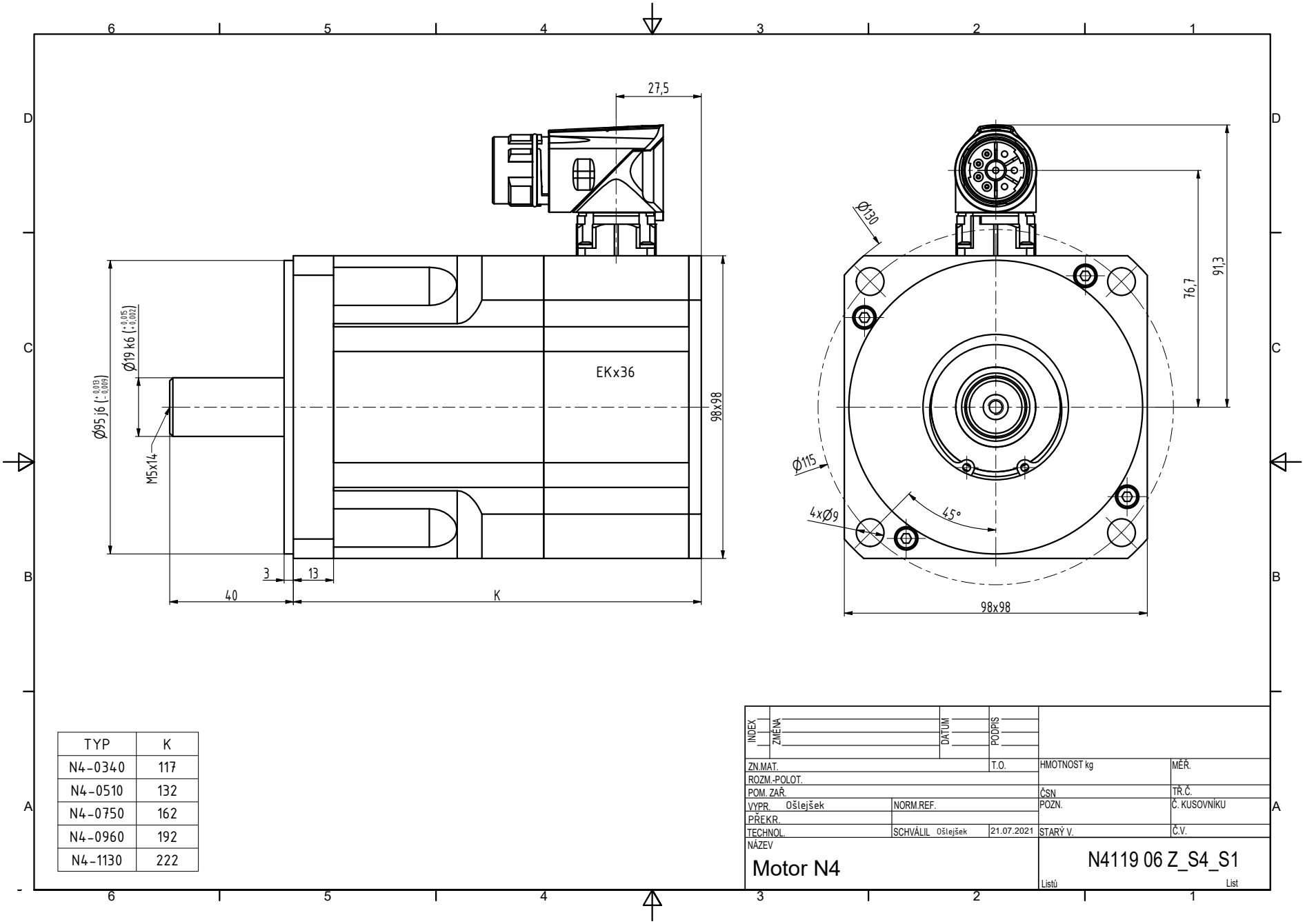

TYP	K
N4-0340	117
N4-0510	132
N4-0750	162
N4-0960	192
N4-1130	222

INDEX	ZMĚNA	DATUM	PODPIS

ZN.MAT.			T.O.	HMOTNOST kg	MĚŘ.
ROZM.-POLOT.					
POM. ZAŘ.				ČSN	TŘ.Č.
VYPR. Ošlejšek	NORM.REF.			POZN.	Č. KUSOVNÍKU
PŘEKR.					
TECHNOL.	SCHVÁLIL Ošlejšek	21.07.2021		STARÝ V.	Č.V.

NÁZEV

Motor N4

N4119 06 Z_S4_S1

Listů List