Engineering data (WIN 969)		
DC bus voltage	48	V DC
Nominal AC voltage	33	V AC (rms)
Rated voltage	30	V AC (rms)
Rated power	511	W
Rated speed	2500	rpm
Rated torque	1.95	Nm
Rated current	13.67	A (rms)
Peak torque	6.15	Nm
Peak current	50.2	A (rms)
Stall torque	2.05	Nm
Stall current	12.4	A (rms)
No load speed	3280	rpm
EMF constant ±10%	10	V AC (rms) / 1000rpm
Theoretical torque constant ±10%	0.17	Nm / A (rms)
Torque constant ±10% @ rated load	0.14	Nm / A (rms)
Number of poles	10	
Electrical time constant	2.59	ms
Winding terminal resistance	0.27	Ω
Rotary field terminal inductance	0.7	mH

Customs info	
HS Code	85015100

Mechanical data (setting 5)		
Max mechanical speed	12000	rpm
Mech. time constant	0.94	ms
Thermal time constant	23	min
Rotor inertia	0.55	kgcm²
Protection	IP64	
Color	RAL 9005	
Cooling	Convection	
Max. axial force 20kh	75	N
Max. radial force 20kh*	396	N
Max. axial force 100kh	44	N
Max. radial force 100kh*	232	N

** Defined for point of action at ½ output shaft length*

Sensors	
Temperature	PTC 111-K13 {PTC 111-K13 Reissmann}
Feedback	2-pole resolver (ER5Kd411, TS2620N21E11, RE-15-1-A15)

Brake		
Braking torque	4.50	Nm
Voltage	24	V DC
Power @20°C	12.0	W
Current @20°C	0.50	A
Inertia	0.20	kgcm²
Mass	0.47	kg

Note

The winding of the motor has rated current 13.67 A. Power cable is rated only for 10 A. The motor can be operated only with continuous current limited to 10 A in servoamplifier. Otherwise the power cable could be burned.

Torque / speed curve

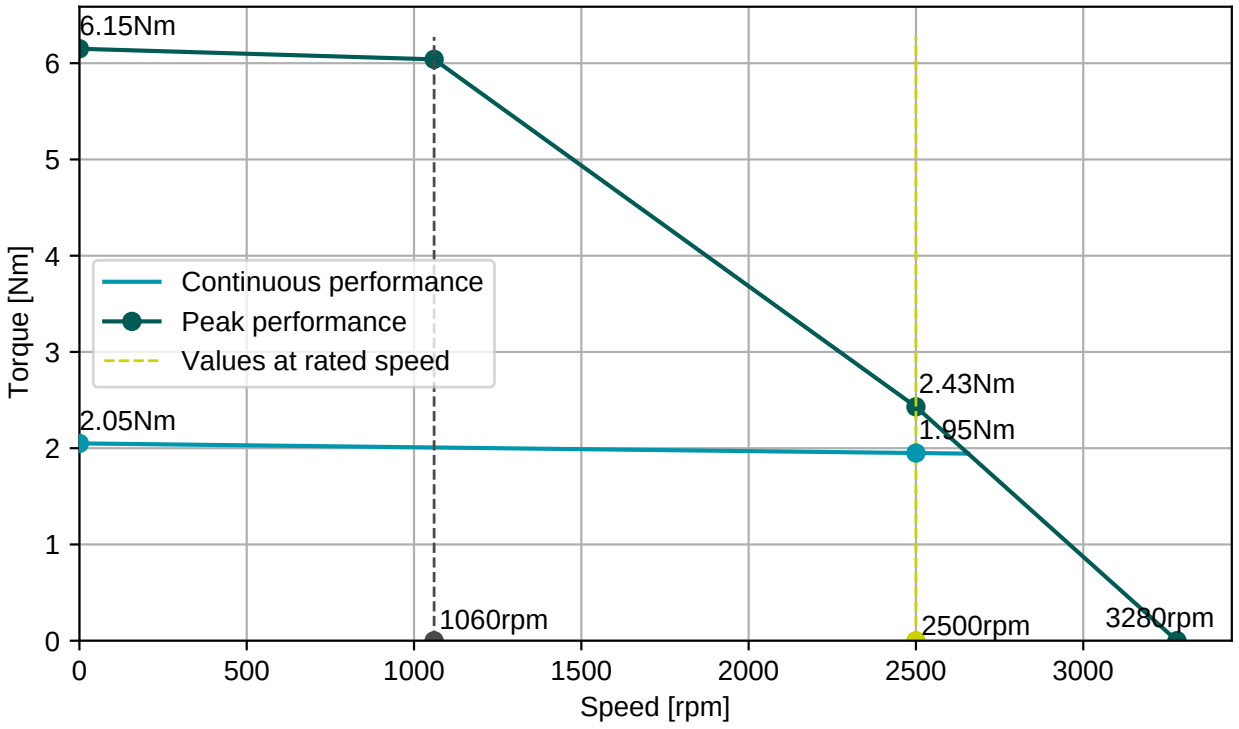

Cable SF4x1,5/2x(2x0,75), D=11,8±0,5mm

Connector 1 (21)	
1	U
2	V
3	W
PE	PE
5	Brake+
6	Brake-

Numbers printed on the cables

Cable R4x2x0,25, D=6,8±0,4mm

Connector 2 (22)	
white	R1
brown	R2
grey	S1
green	S2
pink	S3
yellow	S4
red	Therm+
blue	Therm-

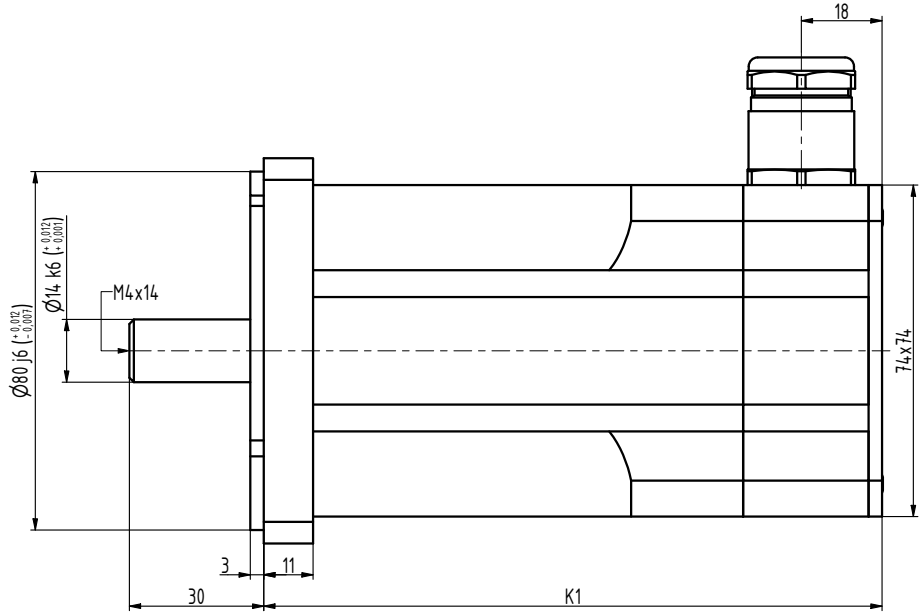

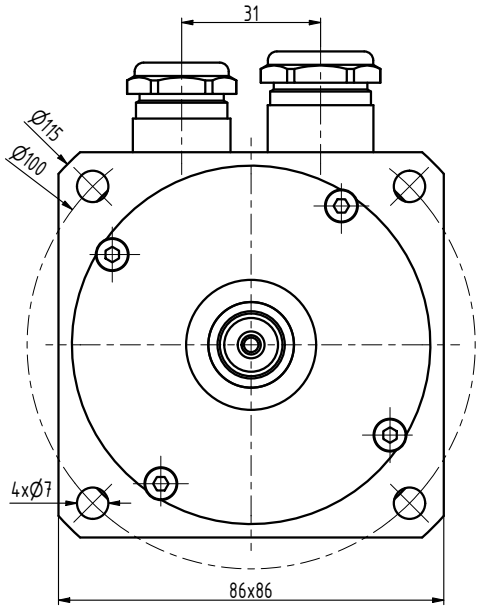

TYP	K1
N3-0115	120
N3-0205	138
N3-0280	156
N3-0350	174
N3-0420	192
N3-0480	210

INDEX	ZMĚNA	DATUM	PODPIS		
ZN.MAT.			T.O.	HMOTNOST kg	MĚŘ.
ROZM.-POLOT.					
POM. ZAŘ.				ČSN	TŘ.Č.
VYPR. Šimík		NORM.REF.		POZN.	Č. KUSOVNÍKU
PŘEKR. Šimík 19.2.2018					
TECHNOL.		SCHVÁLIL Ošlejšek	21.01.2015	STARÝ V.	Č.V.

NÁZEV
Motor N3

N3111 07 B Z

Listů List