Engineering data (WIN 750)		
DC bus voltage	320	V DC
Nominal AC voltage	220	V AC (rms)
Rated voltage	161	V AC (rms)
Rated power	270	W
Rated speed	6000	rpm
Rated torque	0.43	Nm
Rated current	1.3	A (rms)
Peak torque	2.16	Nm
Peak current	6.8	A (rms)
Stall torque	0.54	Nm
Stall current	1.48	A (rms)
No load speed	9870	rpm
EMF constant ±10%	22	V AC (rms) / 1000rpm
Theoretical torque constant ±10%	0.36	Nm / A (rms)
Torque constant ±10% @ rated load	0.33	Nm / A (rms)
Number of poles	6	
Electrical time constant	1.25	ms
Winding terminal resistance	15.82	Ω
Rotary field terminal inductance	19.8	mH

Customs info	
HS Code	85015100

Mechanical data (setting 5)		
Max mechanical speed	12000	rpm
Mech. time constant	1.45	ms
Thermal time constant	12	min
Rotor inertia	0.07	kgcm²
Protection	IP64	
Color	RAL 9005	
Cooling	Convection	
Max. axial force 20kh	35	N
Max. radial force 20kh*	186	N
Max. axial force 100kh	21	N
Max. radial force 100kh*	109	N

** Defined for point of action at ½ output shaft length*

Sensors	
Temperature	PTC 111-K13 {PTC 111-K13 Reissmann}
Feedback	2-pole resolver (ER5Kd411, TS2620N21E11, RE-15-1-A15)

Torque / speed curve

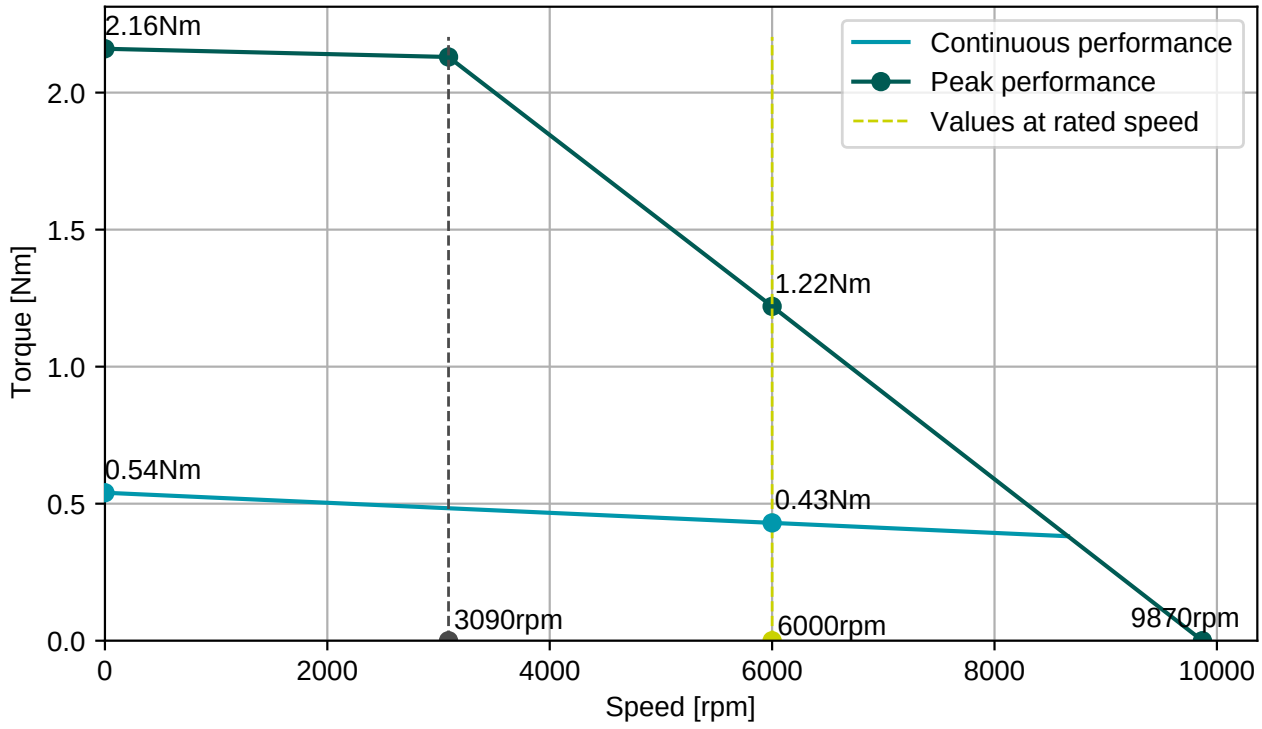

EGA101N00000001000

2x M15, 9 and 12 poles rotary

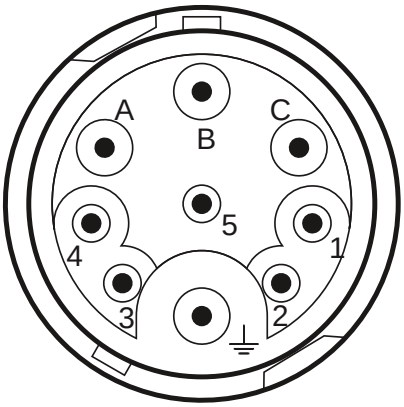

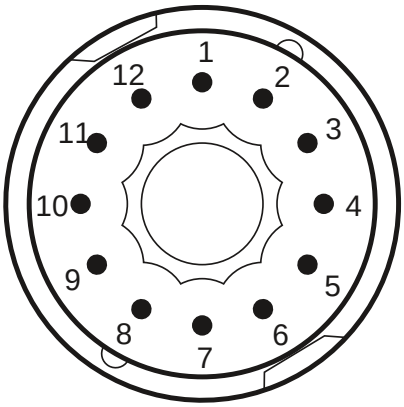

Connector 1 (226)	
A	U
B	V
C	W
PE	PE
1	Brake+
2	Brake-

Connector 2 (227)	
2	Therm+
3	S4
4	S3
5	R2
6	Therm-
7	S2
8	S1
9	R1

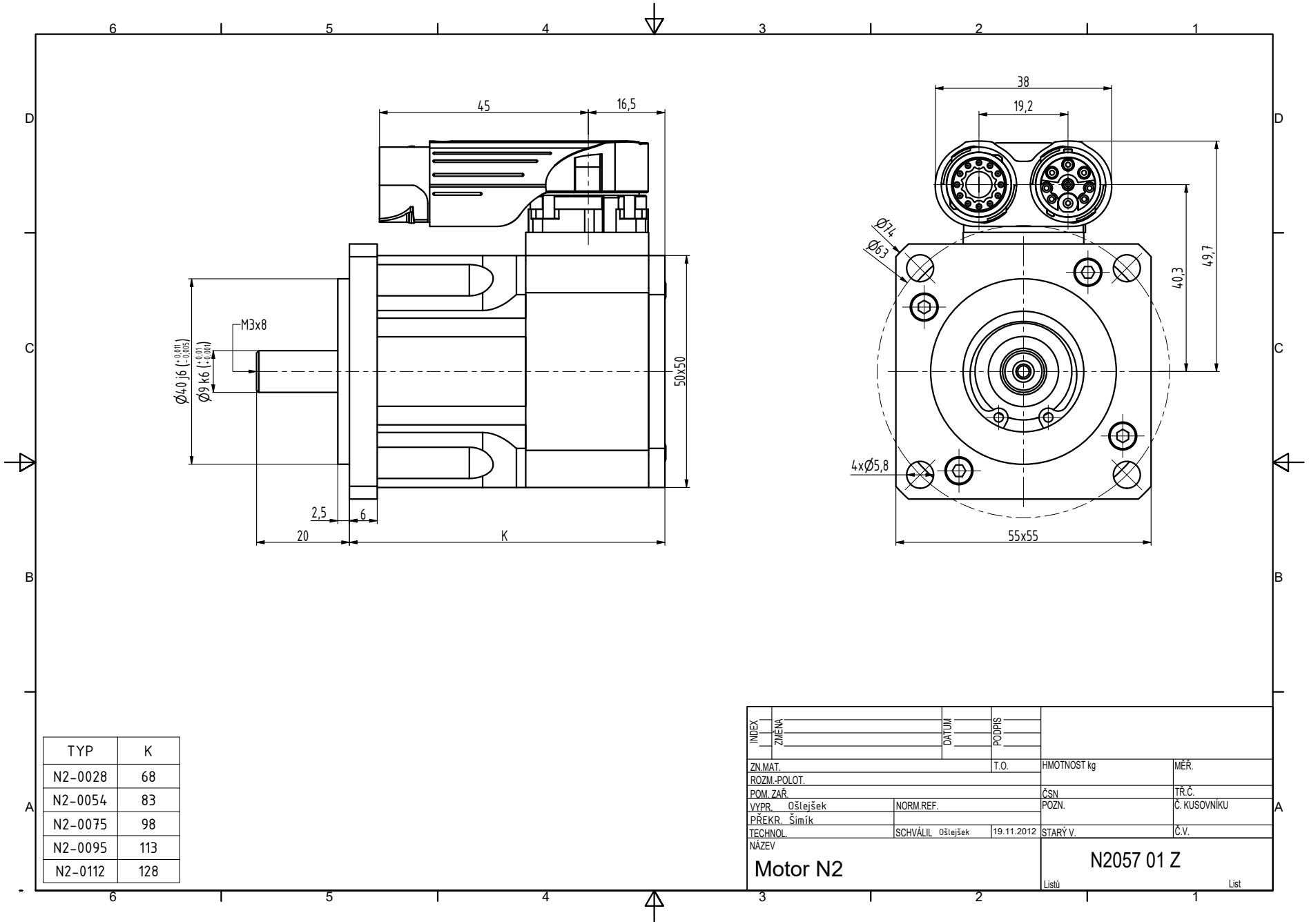

TYP	K
N2-0028	68
N2-0054	83
N2-0075	98
N2-0095	113
N2-0112	128

INDEX	ZMĚNA	DATUM	PODPIS

ZN.MAT.		T.O.	HMOTNOST kg	MĚŘ.	
ROZM.-POLOT.					
POM. ZAŘ.			ČSN	TŘ.Č.	
VYPR. Ošlejšek	NORM.REF.		POZN.	Č. KUSOVNÍKU	
PŘEKR. Šimík					
TECHNOL.	SCHVÁLIL Ošlejšek	19.11.2012	STARÝ V.	Č.V.	

NÁZEV

Motor N2

N2057 01 Z

Listů List