Engineering data (WIN 912)		
DC bus voltage	560	V DC
Nominal AC voltage	380	V AC (rms)
Rated voltage	305	V AC (rms)
Rated power	942	W
Rated speed	2000	rpm
Rated torque	4.50	Nm
Rated current	2.59	A (rms)
Peak torque	15.3	Nm
Peak current	11	A (rms)
Stall torque	5.1	Nm
Stall current	2.43	A (rms)
No load speed	2960	rpm
EMF constant ±10%	127	V AC (rms) / 1000rpm
Theoretical torque constant ±10%	2.1	Nm / A (rms)
Torque constant ±10% @ rated load	1.7	Nm / A (rms)
Number of poles	10	
Electrical time constant	5.43	ms
Winding terminal resistance	9.69	Ω
Rotary field terminal inductance	52.6	mH

Customs info	
HS Code	85015220

Mechanical data (setting 5)		
Max mechanical speed	9000	rpm
Mech. time constant	0.78	ms
Thermal time constant	25	min
Rotor inertia	2.04	kgcm²
Protection	IP64	
Color	RAL 9005	
Cooling	Convection	
Max. axial force 20kh	129	N
Max. radial force 20kh*	681	N
Max. axial force 100kh	76	N
Max. radial force 100kh*	399	N

** Defined for point of action at ½ output shaft length*

Sensors	
Temperature	PTC 111-K13 {PTC 111-K13 Reissmann}
Feedback	2-pole resolver (ER5Kd411, TS2620N21E11, RE-15-1-A15)

Torque / speed curve

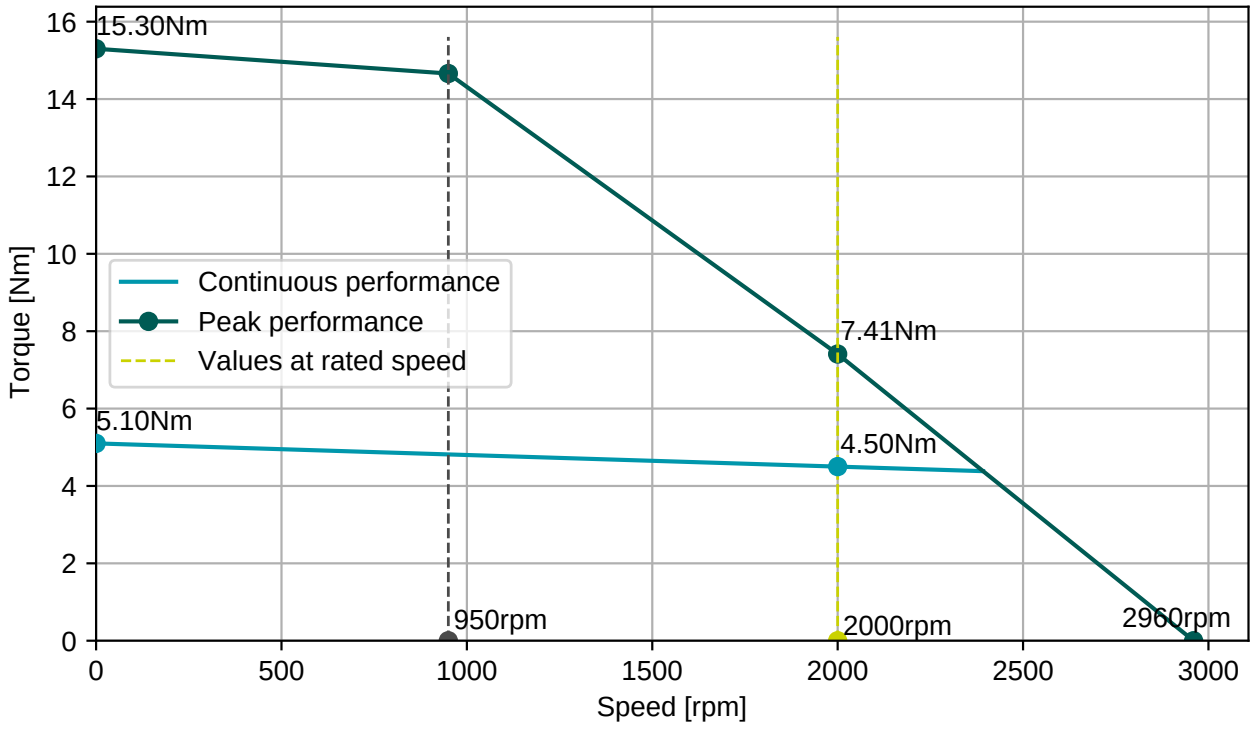

BGC110N00001216000
M23, 8 poles, rotary

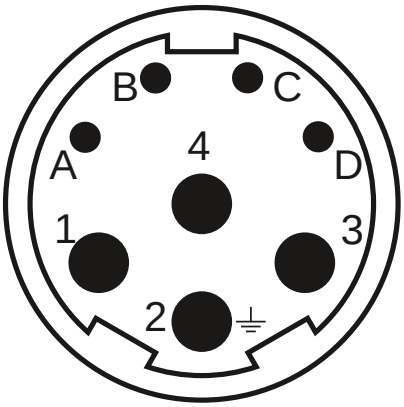

AGC052N00001215000
M23, 12 poles, rotary

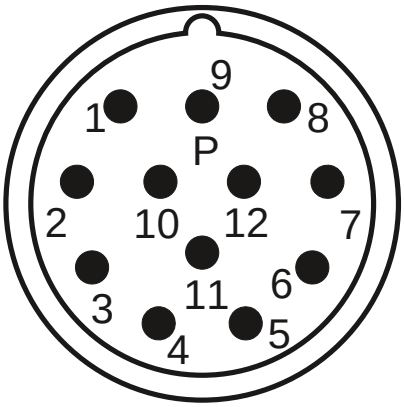

Connector 1 (9)	
1	U
4	V
3	W
2	PE
A	Brake+
B	Brake-
C	
D	

Connector 2 (10)	
2	Therm+
3	S4
4	S3
5	R2
6	Therm-
7	S2
8	S1
9	R1

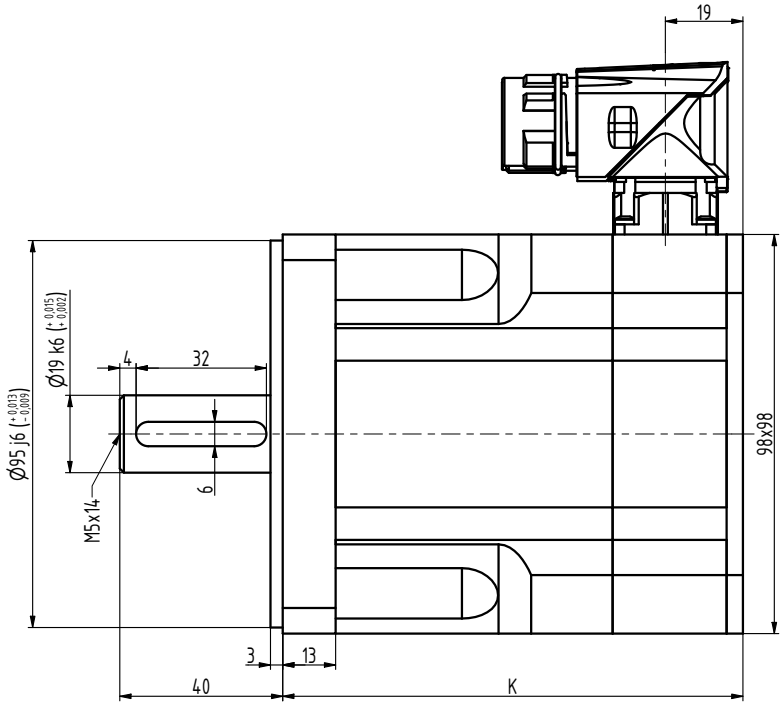

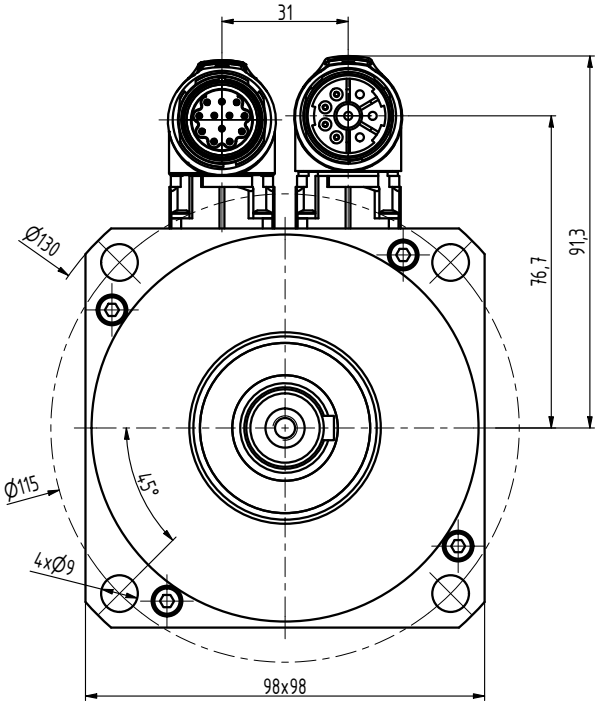

TYP	K
N4-0340	98
N4-0510	113
N4-0750	143
N4-0960	173
N4-1130	203

INDEX	ZMĚNA	DATUM	PODPIS		
ZN.MAT.			T.O.	HMOTNOST kg	MĚŘ.
ROZM.-POLOT.					
POM. ZAŘ.				ČSN	TŘ.Č.
VYPR. Ošlejšek		NORM.REF.		POZN.	Č. KUSOVNÍKU
PŘEKR.					
TECHNOL.		SCHVÁLIL Ošlejšek	09.07.2021	STARÝ V.	Č.V.
NÁZEV	Motor N4			N4083 00 P Z_S4_S1	
				Listů	List