Engineering data (WIN 934)		
DC bus voltage	560	V DC
Nominal AC voltage	380	V AC (rms)
Rated voltage	271	V AC (rms)
Rated power	942	W
Rated speed	2000	rpm
Rated torque	4.50	Nm
Rated current	2.91	A (rms)
Peak torque	15.3	Nm
Peak current	12.4	A (rms)
Stall torque	5.1	Nm
Stall current	2.73	A (rms)
No load speed	3330	rpm
EMF constant ±10%	113	V AC (rms) / 1000rpm
Theoretical torque constant ±10%	1.87	Nm / A (rms)
Torque constant ±10% @ rated load	1.55	Nm / A (rms)
Number of poles	10	
Electrical time constant	5.43	ms
Winding terminal resistance	7.62	Ω
Rotary field terminal inductance	41.4	mH

Customs info	
HS Code	85015220

Mechanical data (setting 48)		
Max mechanical speed	9000	rpm
Mech. time constant	0.77	ms
Thermal time constant	25	min
Rotor inertia	2.04	kgcm²
Protection	IP64	
Color	RAL 9005	
Cooling	Convection	
Max. axial force 20kh	129	N
Max. radial force 20kh*	681	N
Max. axial force 100kh	76	N
Max. radial force 100kh*	399	N

** Defined for point of action at ½ output shaft length*

Sensors	
Temperature	PT1000 {PT1000}
Feedback	EDM35 (HDSL) multi-turn, 20+12 bits

Torque / speed curve

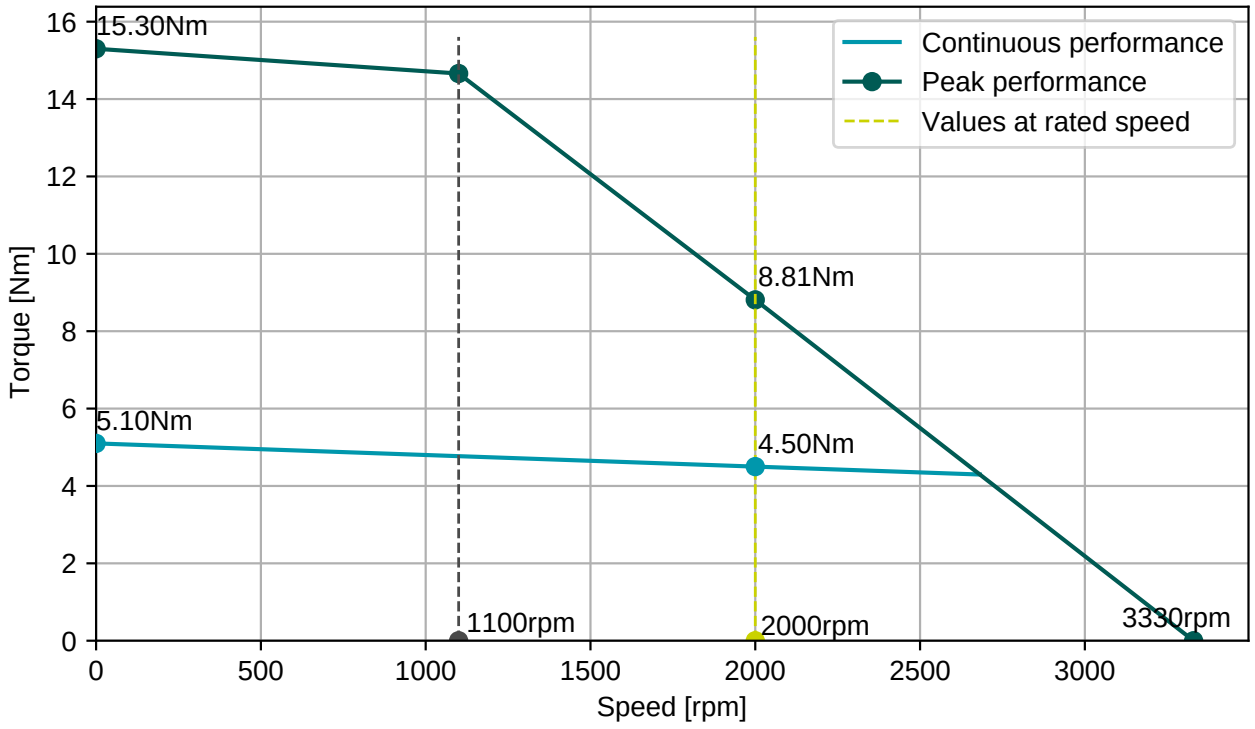

BGC110N00001216000

M23, 8 poles, rotary

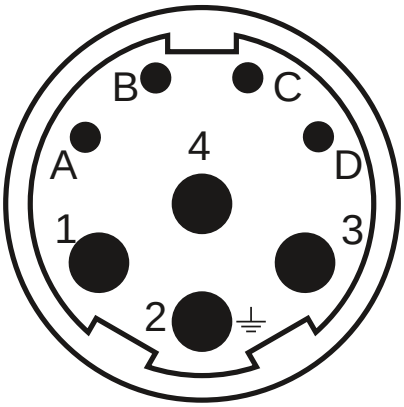

Connector 1 (283)	
1	U
4	V
3	W
2	PE
A	Brake+
B	Brake-
C	GND/DSL-
D	+Us/DSL+

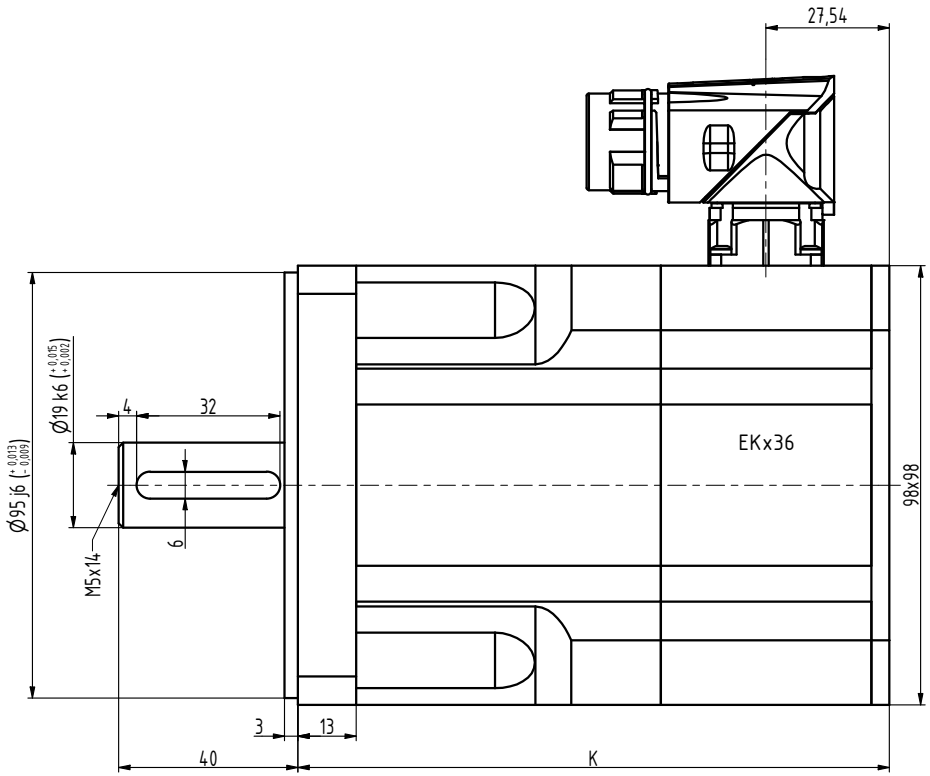

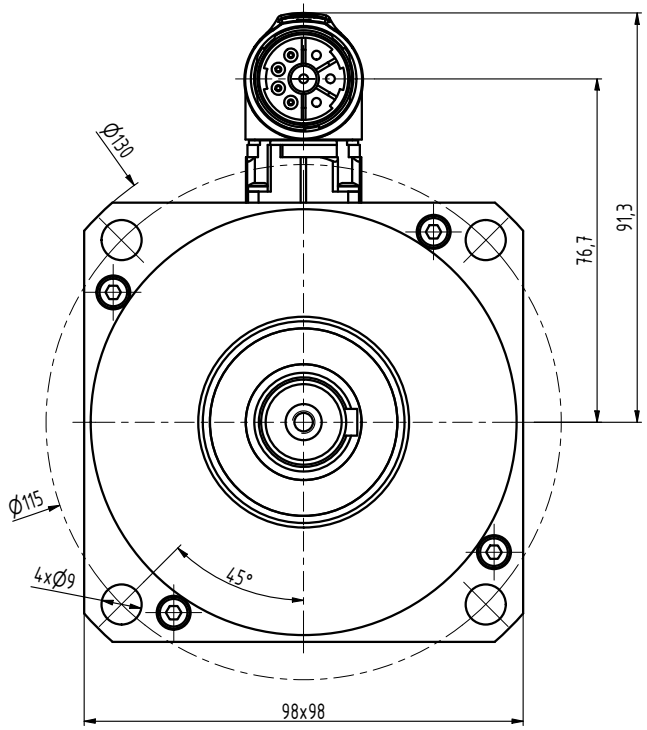

TYP	K
N4-0340	117
N4-0510	132
N4-0750	162
N4-0960	192
N4-1130	222

INDEX	ZMĚNA	DATUM	PODPIS		
ZN.MAT.			T.O.	HMOTNOST kg	MĚŘ.
ROZM.-POLOT.					
POM. ZAŘ.				ČSN	TŘ.Č.
VYPR. Ošlejšek		NORM.REF.		POZN.	Č. KUSOVNÍKU
PŘEKR.					
TECHNOL.		SCHVÁLIL Ošlejšek	21.07.2021	STARÝ V.	Č.V.
NÁZEV	Motor N4			N4119 06 P Z_S4_S1	
				Listů	List