Engineering data (WIN 940)		
DC bus voltage	560	V DC
Nominal AC voltage	380	V AC (rms)
Rated voltage	308	V AC (rms)
Rated power	7.9	kW
Rated speed	3000	rpm
Rated torque	25.00	Nm
Rated current	17.69	A (rms)
Peak torque	114	Nm
Peak current	83	A (rms)
Stall torque	38	Nm
Stall current	21.5	A (rms)
No load speed	3550	rpm
EMF constant ±10%	107	V AC (rms) / 1000rpm
Theoretical torque constant ±10%	1.77	Nm / A (rms)
Torque constant ±10% @ rated load	1.41	Nm / A (rms)
Number of poles	10	
Electrical time constant	13.44	ms
Winding terminal resistance	0.32	Ω
Rotary field terminal inductance	4.3	mH

Customs info	
HS Code	85015230

Mechanical data (setting 5)		
Max mechanical speed	6000	rpm
Mech. time constant	0.71	ms
Thermal time constant	57	min
Rotor inertia	39.9	kgcm²
Protection	IP64	
Color	RAL 9005	
Cooling	Convection	
Max. axial force 20kh	141	N
Max. radial force 20kh*	741	N
Max. axial force 100kh	82	N
Max. radial force 100kh*	434	N

** Defined for point of action at ½ output shaft length*

Sensors	
Temperature	PTC 111-K13 {PTC 111-K13 Reissmann}
Feedback	2-pole resolver (ER5Kd411, TS2620N21E11, RE-15-1-A15)

Torque / speed curve

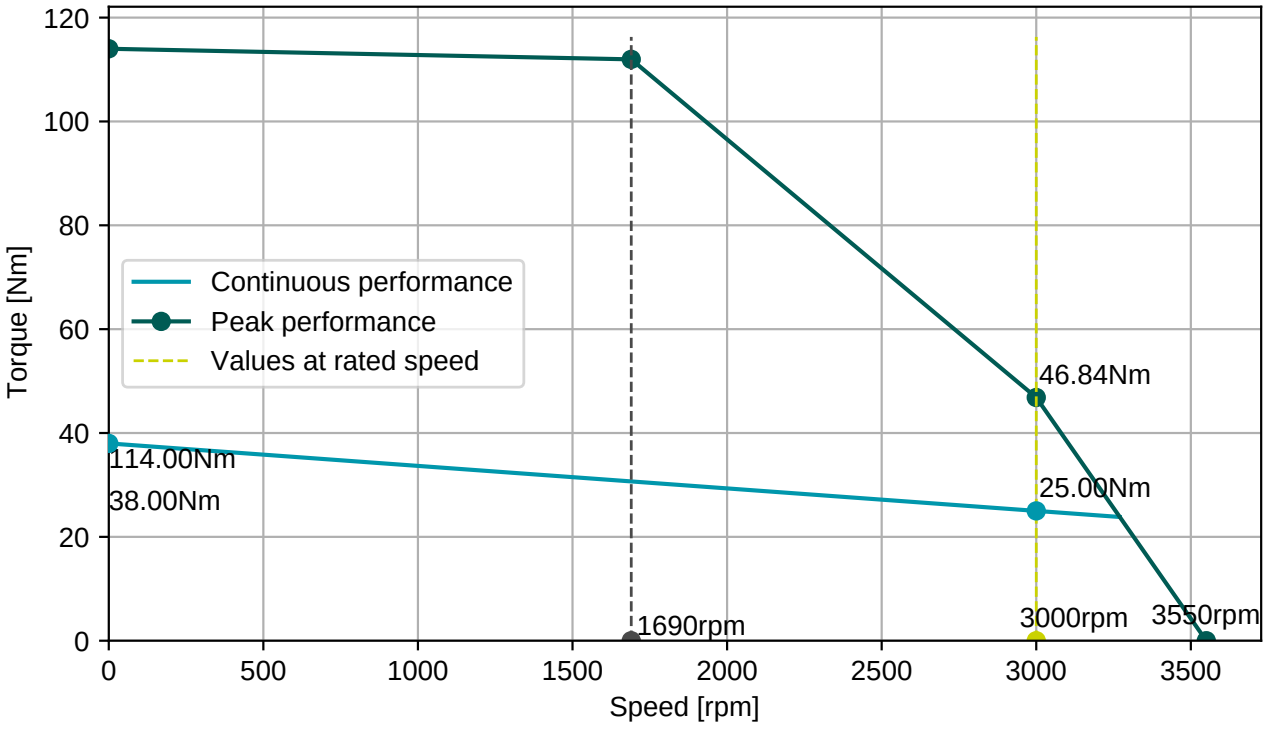

BGC110N00001216000
M23, 8 poles, rotary

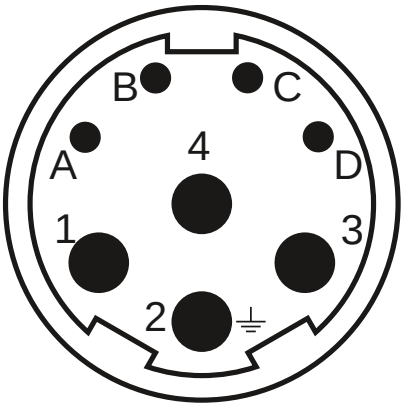

AGC052N00001215000
M23, 12 poles, rotary

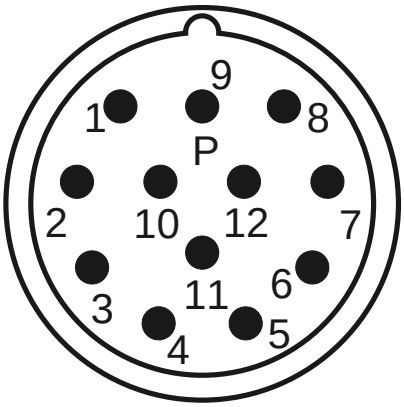

Connector 1 (9)	
1	U
4	V
3	W
2	PE
A	Brake+
B	Brake-
C	
D	

Connector 2 (10)	
2	Therm+
3	S4
4	S3
5	R2
6	Therm-
7	S2
8	S1
9	R1

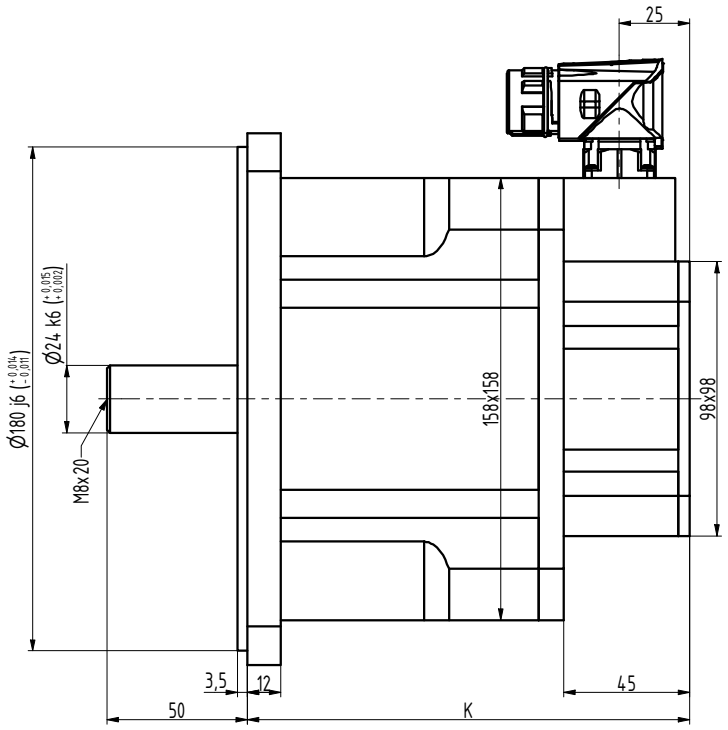

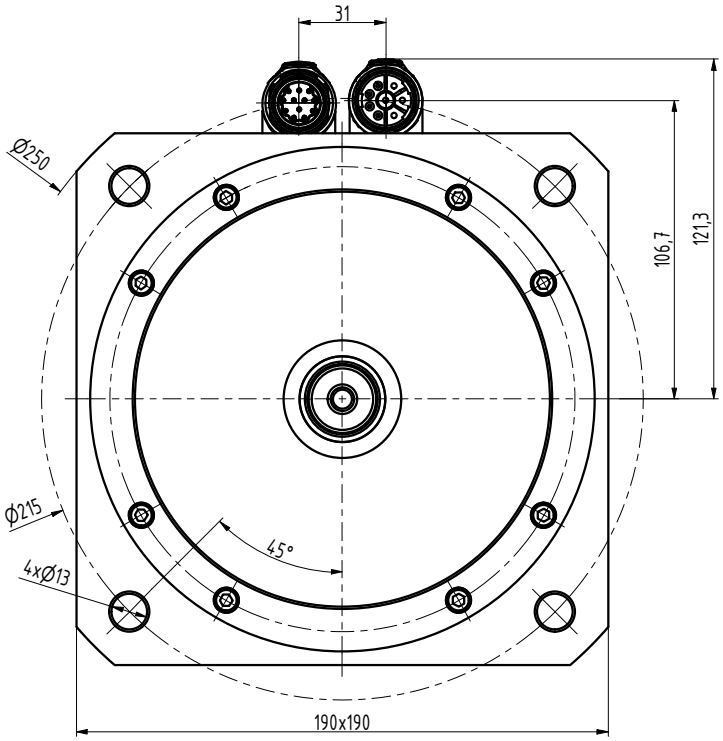

TYP	K
N6-1800	158
N6-2400	183
N6-3000	208
N6-3800	233
N6-4400	258

INDEX	ZMĚNA	DATUM	PODPIS		
ZN.MAT.			T.O.	HMOTNOST kg	MĚŘ.
ROZM.-POLOT.					
POM. ZAŘ.				ČSN	TŘ.Č.
VYPR. Ošlejšek		NORM.REF.		POZN.	Č. KUSOVNÍKU
PŘEKR.					
TECHNOL.		SCHVÁLIL Ošlejšek	16.09.2021	STARÝ V.	Č.V.
NÁZEV					
Motor N6				N6025 01 Z_S4_S1	
				Listů	List