| Engineering data (WIN 854) | | |
|---|---|---|
| DC bus voltage | 560 | V DC |
| Nominal AC voltage | 380 | V AC (rms) |
| Rated voltage | 289 | V AC (rms) |
| Rated power | 2.4 | kW |
| Rated speed | 1500 | rpm |
| Rated torque | 15.00 | Nm |
| Rated current | 5.66 | A (rms) |
| Peak torque | 48 | Nm |
| Peak current | 19.7 | A (rms) |
| Stall torque | 16 | Nm |
| Stall current | 5.6 | A (rms) |
| No load speed | 2190 | rpm |
| EMF constant ±10% | 173 | V AC (rms) / 1000rpm |
| Theoretical torque constant ±10% | 2.86 | Nm / A (rms) |
| Torque constant ±10% @ rated load | 2.65 | Nm / A (rms) |
| Number of poles | 10 | |
| Electrical time constant | 8.60 | ms |
| Winding terminal resistance | 2.85 | Ω |
| Rotary field terminal inductance | 24.5 | mH |

| Customs info | |
|---|---|
| HS Code | 85015220 |

| Mechanical data (setting 48) | | |
|---|---|---|
| Max mechanical speed | 9000 | rpm |
| Mech. time constant | 0.69 | ms |
| Thermal time constant | 55 | min |
| Rotor inertia | 11.5 | kgcm² |
| Protection | IP64 | |
| Color | RAL 9005 | |
| Cooling | Convection | |
| Max. axial force 20kh | 171 | N |
| Max. radial force 20kh* | 899 | N |
| Max. axial force 100kh | 100 | N |
| Max. radial force 100kh* | 526 | N |

** Defined for point of action at ½ output shaft length*

| Sensors | |
|---|---|
| Temperature | PT1000 {PT1000} |
| Feedback | EKS36 (HDSL) single-turn, 17 bits |

Torque / speed curve

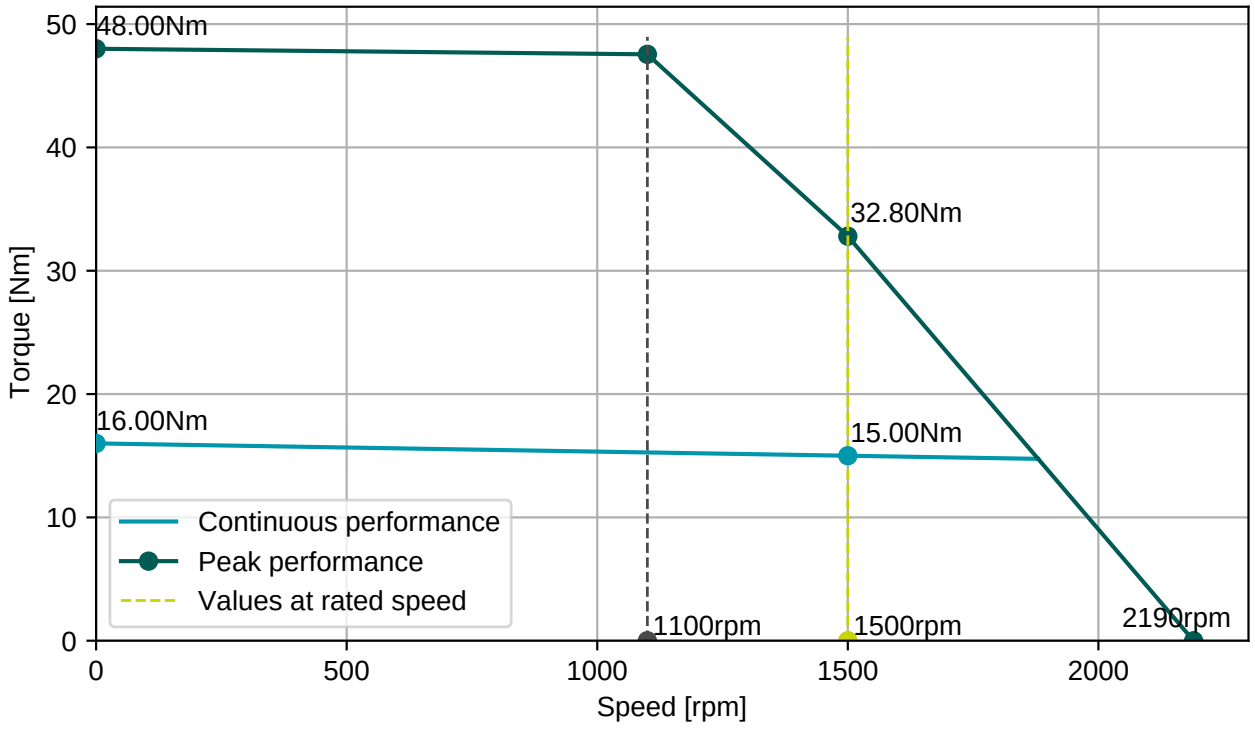


**BGC110N00001216000**

M23, 8 poles, rotary

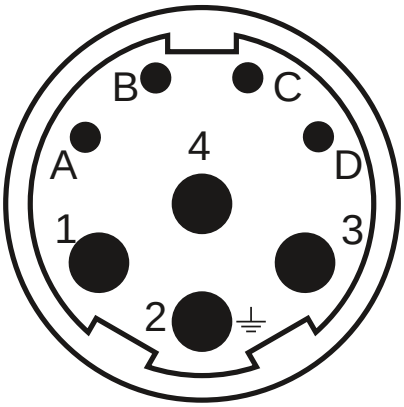


| Connector 1 (283) | |
|---|---|
| **1** | U |
| **4** | V |
| **3** | W |
| **2** | PE |
| **A** | Brake+ |
| **B** | Brake- |
| **C** | GND/DSL- |
| **D** | +Us/DSL+ |

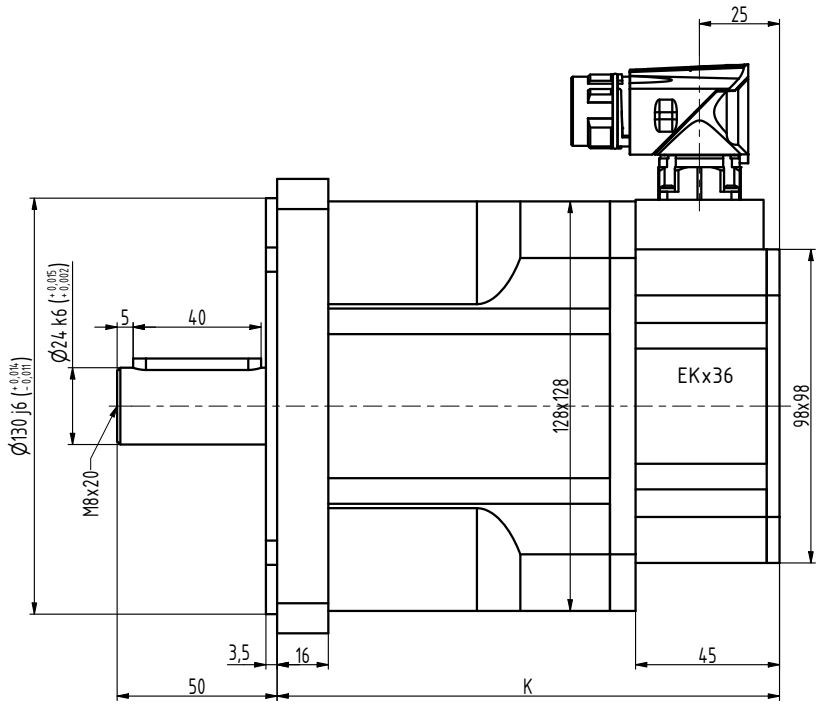


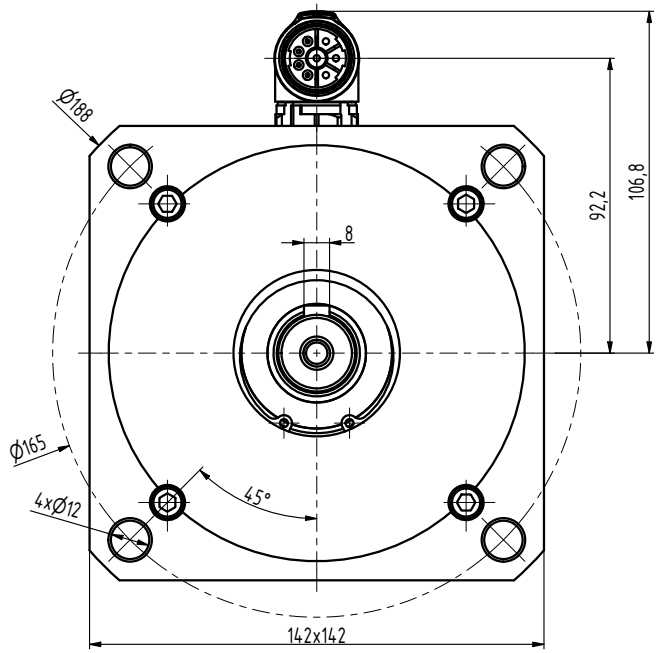


| TYP | K |
|---|---|
| N5-0650 | 127 |
| N5-1200 | 157 |
| N5-1600 | 187 |
| N5-2000 | 217 |
| N5-2400 | 247 |

| INDEX | ZMĚNA | DATUM | PODPIS | | |
|---|---|---|---|---|---|
| ZN.MAT. | | | T.O. | HMOTNOST kg | MĚŘ. |
| ROZM.-POLOT. | | | | | |
| POM. ZAŘ. | | | | ČSN | TŘ.Č. |
| VYPR. Ošlejšek | | NORM.REF. | | POZN. | Č. KUSOVNÍKU |
| PŘEKR. | | | | | |
| TECHNOL. | | SCHVÁLIL Ošlejšek | 11.09.2021 | STARÝ V. | Č.V. |

NÁZEV

Motor N5

N5087 10 P Z_S4_S1

Listů List