Engineering data (WIN 702)		
DC bus voltage	320	V DC
Nominal AC voltage	220	V AC (rms)
Rated voltage	136	V AC (rms)
Rated power	355	W
Rated speed	3000	rpm
Rated torque	1.13	Nm
Rated current	2.31	A (rms)
Peak torque	3.45	Nm
Peak current	9.2	A (rms)
Stall torque	1.15	Nm
Stall current	2.02	A (rms)
No load speed	6320	rpm
EMF constant ±10%	34.5	V AC (rms) / 1000rpm
Theoretical torque constant ±10%	0.57	Nm / A (rms)
Torque constant ±10% @ rated load	0.49	Nm / A (rms)
Number of poles	10	
Electrical time constant	2.15	ms
Winding terminal resistance	8.39	Ω
Rotary field terminal inductance	18	mH

Customs info	
HS Code	85015100

Mechanical data (setting 5)		
Max mechanical speed	12000	rpm
Mech. time constant	1.38	ms
Thermal time constant	21	min
Rotor inertia	0.31	kgcm²
Protection	IP64	
Color	RAL 9005	
Cooling	Convection	

Sensors	
Temperature	PTC 111-K13 {PTC 111-K13 Reissmann}
Feedback	2-pole resolver (ER5Kd411, TS2620N21E11, RE-15-1-A15)

Brake		
Braking torque	4.50	Nm
Voltage	24	V DC
Power @20°C	12.0	W
Current @20°C	0.50	A
Inertia	0.20	kgcm²
Mass	0.47	kg

Torque / speed curve

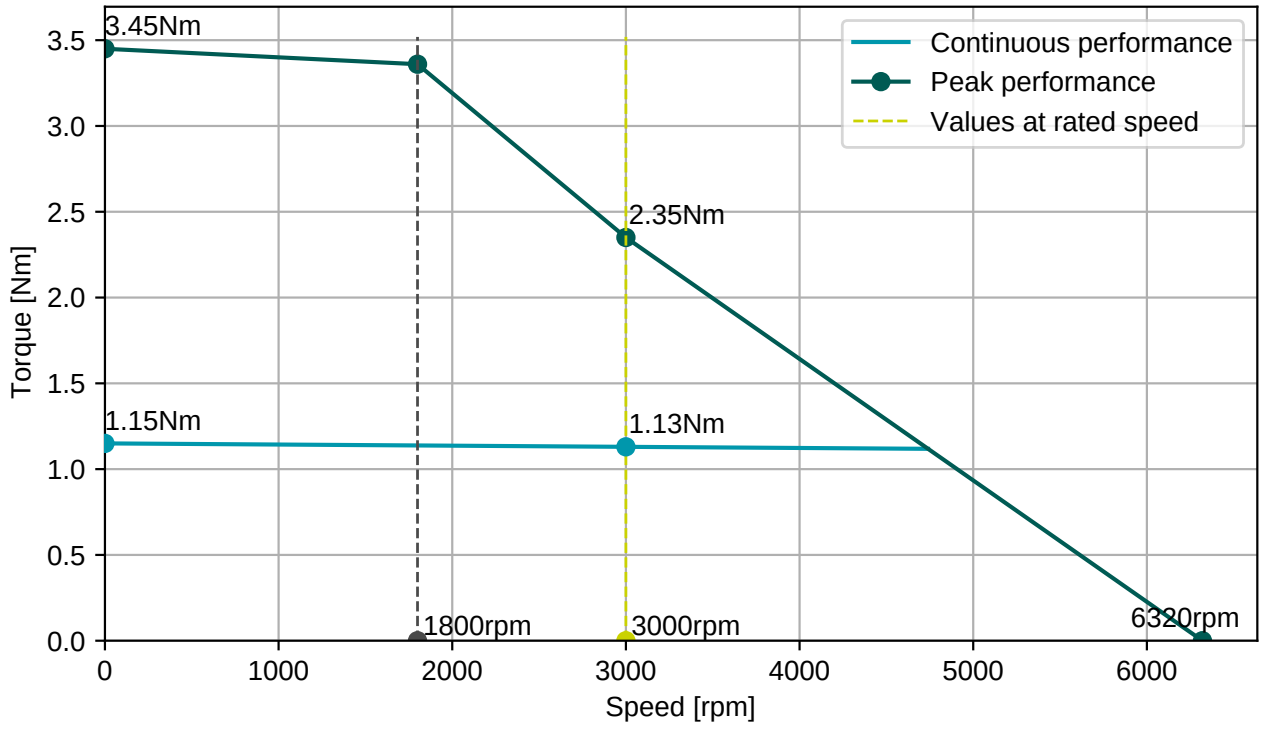

Cable SF4x1/(2x0,75), D=10,3±0,4mm

Connector 1 (21)	
1	U
2	V
3	W
PE	PE
5	Brake+
6	Brake-

Numbers printed on the cables

Cable R4x2x0,25, D=6,8±0,4mm

Connector 2 (22)	
white	R1
brown	R2
grey	S1
green	S2
pink	S3
yellow	S4
red	Therm+
blue	Therm-

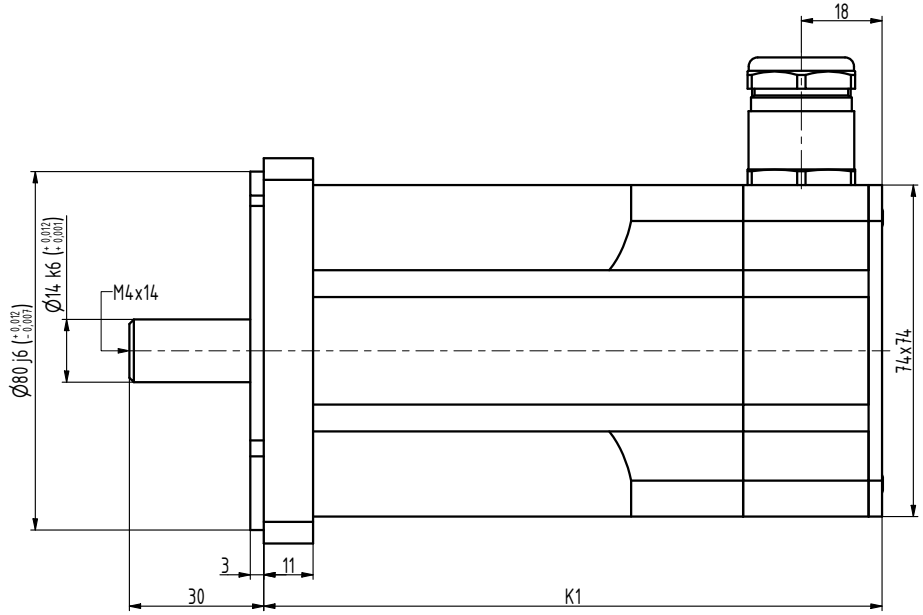

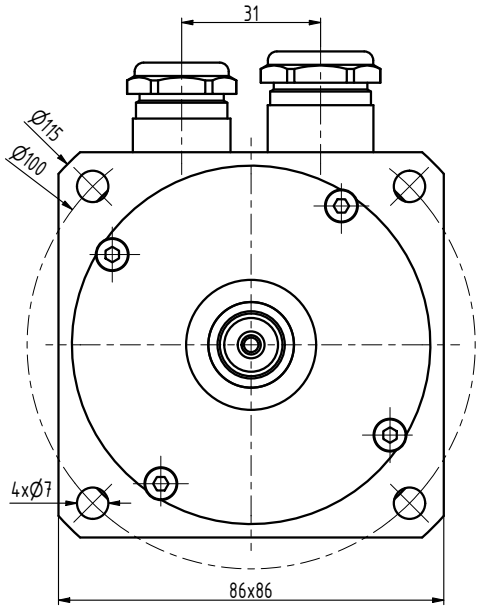

TYP	K1
N3-0115	120
N3-0205	138
N3-0280	156
N3-0350	174
N3-0420	192
N3-0480	210

INDEX	ZMĚNA	DATUM	PODPIS		
ZN.MAT.			T.O.	HMOTNOST kg	MĚŘ.
ROZM.-POLOT.					
POM. ZAŘ.				ČSN	TŘ.Č.
VYPR. Šimík		NORM.REF.		POZN.	Č. KUSOVNÍKU
PŘEKR. Šimík 19.2.2018					
TECHNOL.		SCHVÁLIL Ošlejšek	21.01.2015	STARÝ V.	Č.V.

NÁZEV
Motor N3

N3111 07 B Z

Listů List