Engineering data (WIN 613)		
DC bus voltage	24	V DC
Nominal AC voltage	16	V AC (rms)
Rated voltage	16	V AC (rms)
Rated power	154	W
Rated speed	3000	rpm
Rated torque	0.49	Nm
Rated current	8.1	A (rms)
Peak torque	2	Nm
Peak current	34.3	A (rms)
Stall torque	0.53	Nm
Stall current	8.5	A (rms)
No load speed	4180	rpm
EMF constant ±10%	3.8	V AC (rms) / 1000rpm
Theoretical torque constant ±10%	0.06	Nm / A (rms)
Torque constant ±10% @ rated load	0.06	Nm / A (rms)
Number of poles	6	
Electrical time constant	2.11	ms
Winding terminal resistance	0.38	Ω
Rotary field terminal inductance	0.8	mH

Customs info	
HS Code	85015100

Mechanical data (setting 6)		
Max mechanical speed	12000	rpm
Mech. time constant	1.33	ms
Thermal time constant	15	min
Rotor inertia	0.08	kgcm²
Protection	IP64	
Color	RAL 9005	
Cooling	Convection	
Motor-only mass	0.9	kg

Sensors	
Temperature	KTY 84-130 {KTY 84-130 Reissmann}
Feedback	2-pole resolver (ER5Kd411, TS2620N21E11, RE-15-1-A15)

Note

- Resolver+temperature sensor+brake wires (including connector) – length 90 mm
- U, V, W (including connectors) - length 55 mm

Torque / speed curve

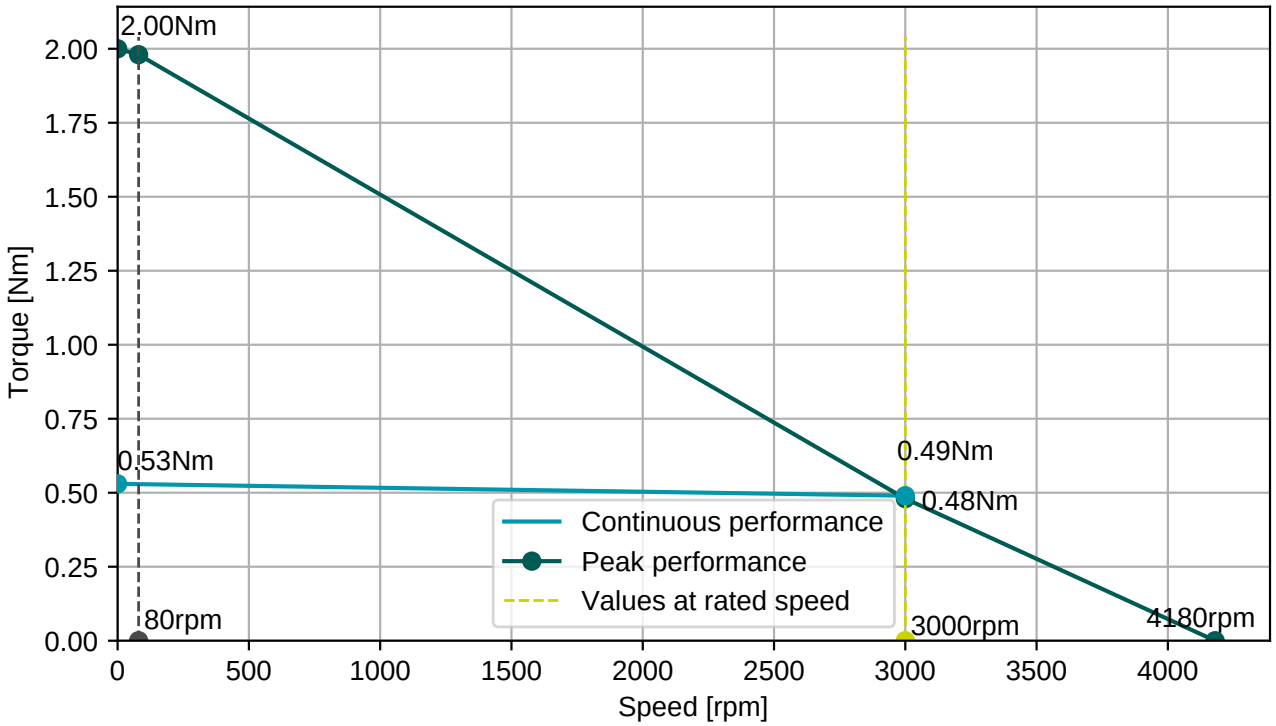

Female Angled Terminal

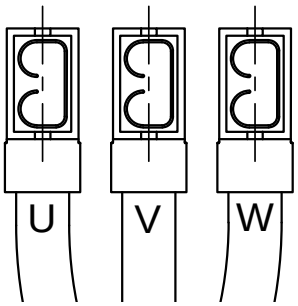

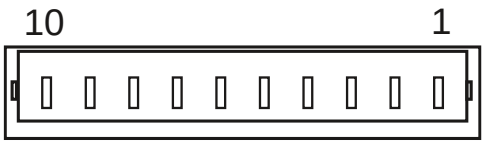

MOLEX 51021-1000

Connector 1 (171)	
white	U
blue	V
red	W

Wires ends assembled by round Female Right Angled Terminal

Connector 2 (214)	
1	S1
2	S3
3	S4
4	S2
5	R2
6	R1
7	+24V Bremse
8	Bremse
9	Temp. Sensor-
10	Temp. Sensor+

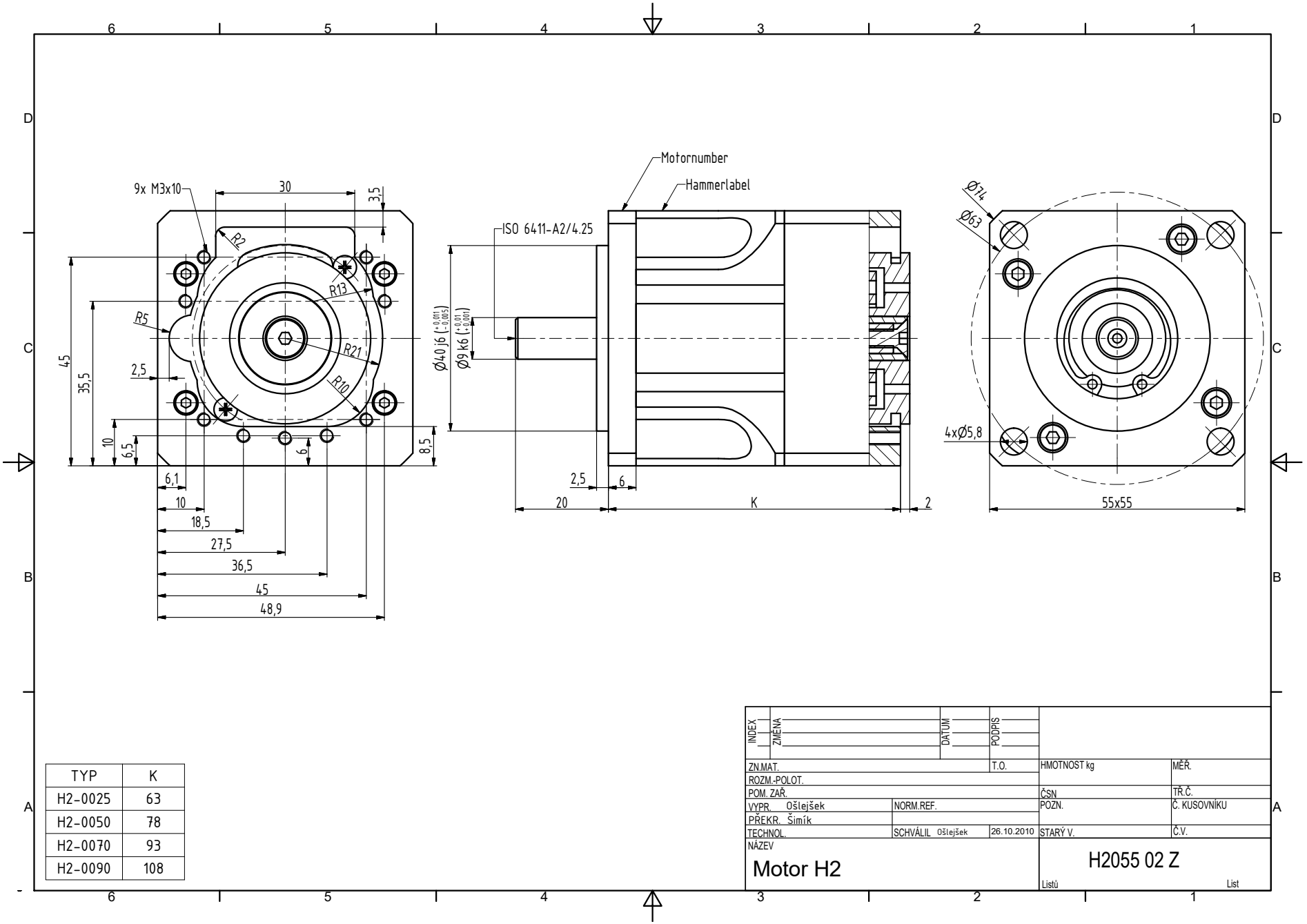

TYP	K
H2-0025	63
H2-0050	78
H2-0070	93
H2-0090	108

INDEX	ZMĚNA	DATUM	PODPIS

ZN.MAT.			T.O.	HMOTNOST kg	MĚŘ.
ROZM.-POLOT.					
POM. ZAŘ.				ČSN	TŘ.Č.
VYPR. Ošlejšek	NORM.REF.			POZN.	Č. KUSOVNÍKU
PŘEKR. Šimík					
TECHNOL.	SCHVÁLIL Ošlejšek	26.10.2010		STARÝ V.	Č.V.

NÁZEV

Motor H2

H2055 02 Z

Listů List