Engineering data (WIN 613)		
DC bus voltage	24	V DC
Nominal AC voltage	16	V AC (rms)
Rated voltage	16	V AC (rms)
Rated power	154	W
Rated speed	3000	rpm
Rated torque	0.49	Nm
Rated current	8.1	A (rms)
Peak torque	2	Nm
Peak current	34.3	A (rms)
Stall torque	0.53	Nm
Stall current	8.5	A (rms)
No load speed	4180	rpm
EMF constant ±10%	3.8	V AC (rms) / 1000rpm
Theoretical torque constant ±10%	0.06	Nm / A (rms)
Torque constant ±10% @ rated load	0.06	Nm / A (rms)
Number of poles	6	
Electrical time constant	2.11	ms
Winding terminal resistance	0.38	Ω
Rotary field terminal inductance	0.8	mH

Customs info	
HS Code	85015100

Mechanical data (setting 2)		
Max mechanical speed	12000	rpm
Mech. time constant	1.33	ms
Thermal time constant	15	min
Rotor inertia	0.08	kgcm²
Protection	IP64	
Color	RAL 9005	
Cooling	Convection	
Motor-only mass	0.9	kg

Sensors	
Temperature	KTY 84-130 {KTY 84-130 Reissmann}
Feedback	EQI1130 (EnDat 2.1) multi-turn, 18+12 bits

Brake		
Braking torque	2.00	Nm
Voltage	24	V DC
Power @20°C	11.0	W
Current @20°C	0.46	A
Inertia	0.08	kgcm²
Mass	0.20	kg

Note

Temperature sensor+brake wires (including connector) – length 55 mm
- U, V, W (including connectors) - length 55 mm

Torque / speed curve

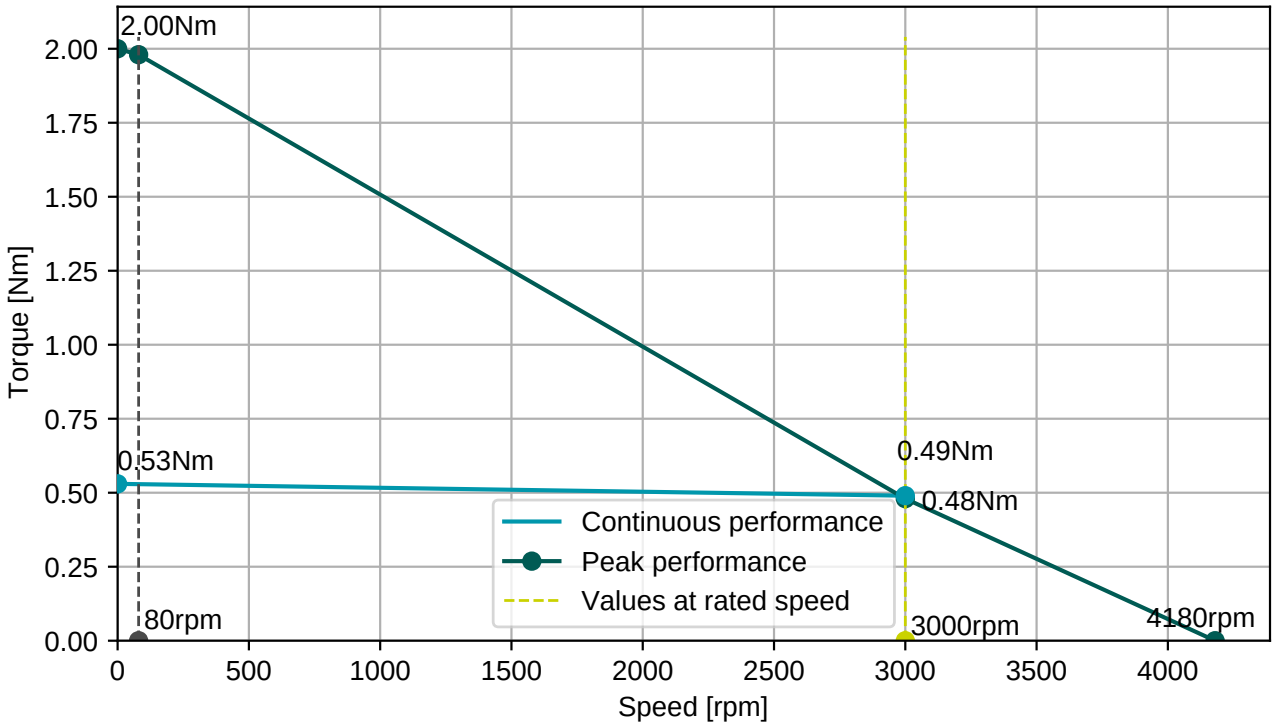

Female Angled Terminal

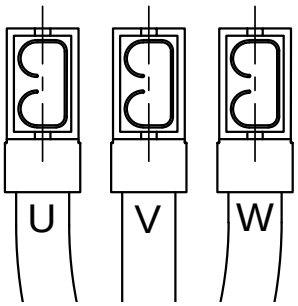

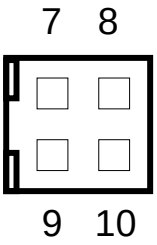

Connector 1 (171)	
white	U
blue	V
red	W

Wires ends assembled by round Female Right Angled Terminal

Connector 2 (172)	
7	Brake
8	Brake
9	Therm-
10	Therm+

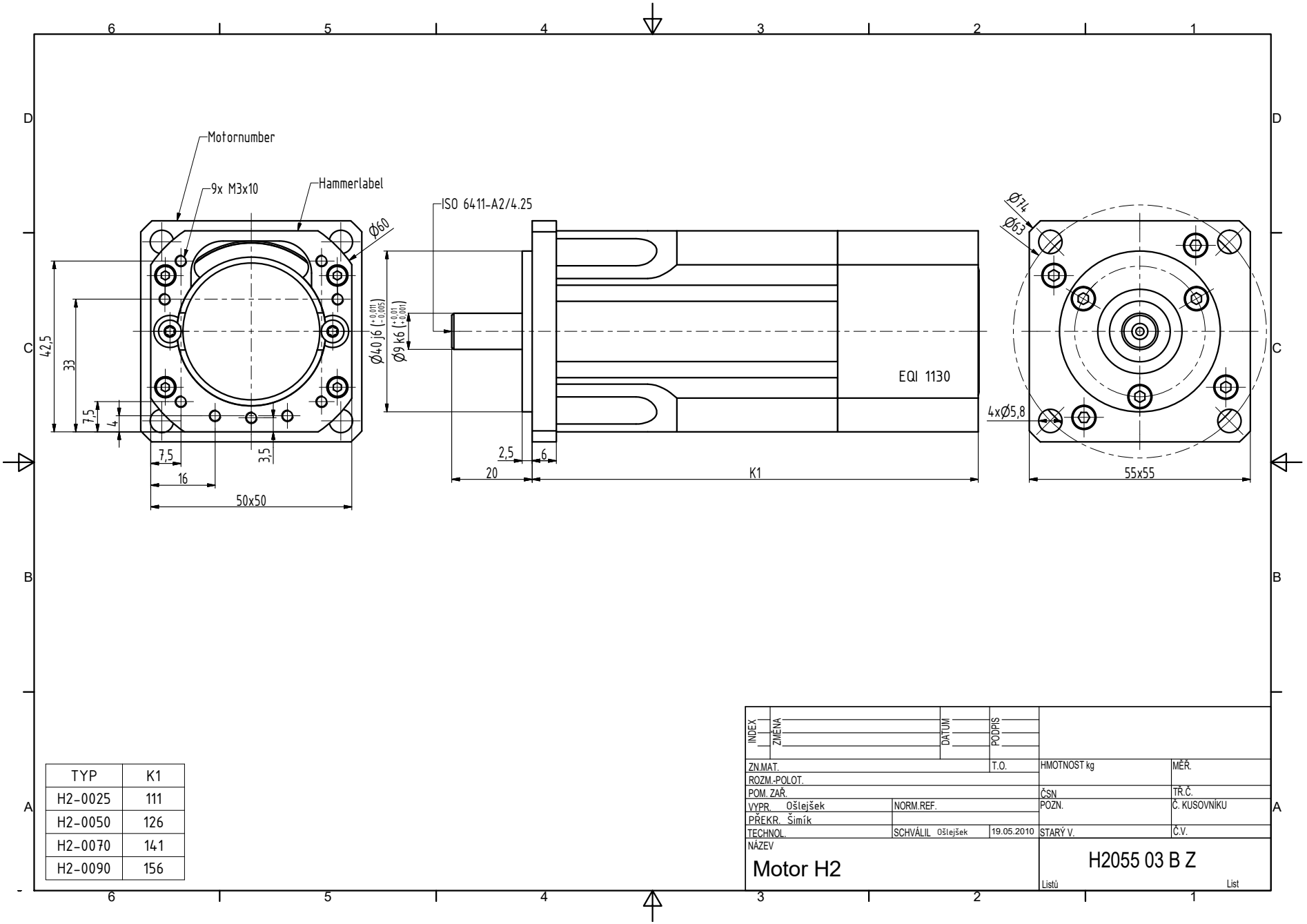

TYP	K1
H2-0025	111
H2-0050	126
H2-0070	141
H2-0090	156

INDEX	ZMĚNA	DATUM	PODPIS		
ZN.MAT.			T.O.	HMOTNOST kg	MĚŘ.
ROZM.-POLOT.					
POM. ZAŘ.				ČSN	TŘ.Č.
VYPR. Ošlejšek		NORM.REF.		POZN.	Č. KUSOVNÍKU
PŘEKR. Šimík					
TECHNOL.		SCHVÁLIL Ošlejšek	19.05.2010	STARÝ V.	Č.V.
NÁZEV					
Motor H2				H2055 03 B Z	
				Listů	List