Engineering motordata (WIN 707)		
DC bus voltage	560	V DC
Nominal AC voltage	380	V AC (rms)
Rated voltage	278	V AC (rms)
Rated power	942	W
Rated speed	3000	rpm
Rated torque	3.00	Nm
Rated current	2.42	A (rms)
Peak torque	10.5	Nm
Peak current	10.9	A (rms)
Stall torque	3.5	Nm
Stall current	2.38	A (rms)
No load speed	4260	rpm
EMF constant ±10%	89	V AC (rms) / 1000rpm
Theoretical torque constant ±10%	1.47	Nm / A (rms)
Torque constant ±10% @ rated load	1.24	Nm / A (rms)
Number of poles	10	
Electrical time constant	2.87	ms
Winding terminal resistance	8.89	Ω
Rotary field terminal inductance	25.5	mH

Customs info	
HS Code	85015220

Mechanical motor data (setting 48)		
Max mechanical speed	12000	rpm
Mech. time constant	0.74	ms
Thermal time constant	27	min
Rotor inertia	1.04	kgcm²
Protection	IP64	
Color	RAL 9005	
Cooling	Convection	
Motor-only mass	2	kg
Max. axial force 20kh	68	N
Max. radial force 20kh*	356	N
Max. axial force 100kh	40	N
Max. radial force 100kh*	208	N

** Defined for point of action at ½ output shaft length*

Sensors	
Temperature	PT1000 {PT1000}
Feedback	EKS36 (HDSL) single-turn, 17 bits

Gearbox engineering data		
Gear ratio	32	
Efficiency*	95	%
Torsional stiffness	10.4	Nm/arcmin
Number of stages	2	
Rated output torque	102	Nm
Cycling output torque	120	Nm
Max output torque	192	Nm
Emergency output torque	240	Nm
Rated input speed	4000	rpm
Max input speed	7000	rpm
Operating temperature	<-25; 90>	°C
Max. backlash	< 9	arcmin
Service life	20000	h

** at rated speed & torque*

Lubrication	
Type	Standard
Lubricant	Grease (lifetime lubrication)

Gearbox mechanical data		
Radial force for 20'000h*	750	N
Radial force for 30'000h*	650	N
Max. radial force*	1250	N
Axial force for 20'000h	1000	N
Axial force for 30'000h	900	N
Max. axial force	1600	N
Tilting moment for 20'000h	31	Nm
Tilting moment for 30'000h	27	Nm
Max. bending moment	16	Nm
Output shaft design	Shaft key	
Mass	2.63	kg
Input inertia	0.366	kgcm²
Protection	IP54	

** Defined for point of action at ½ output shaft length*

Actuator data		
Rated speed	94	rpm
Rated torque	91.20	Nm
Cycling torque	120.00	Nm
Peak torque	192.00	Nm
Emergency stop torque	240.00	Nm
EMF constant ±10%	2848.0	V AC (rms) / 1000rpm
Torque constant ±10% @ rated load	37.69	Nm / A (rms)
Total mass	4.63	kg
Output inertia	1439.7	kgcm²

Torque / speed curve

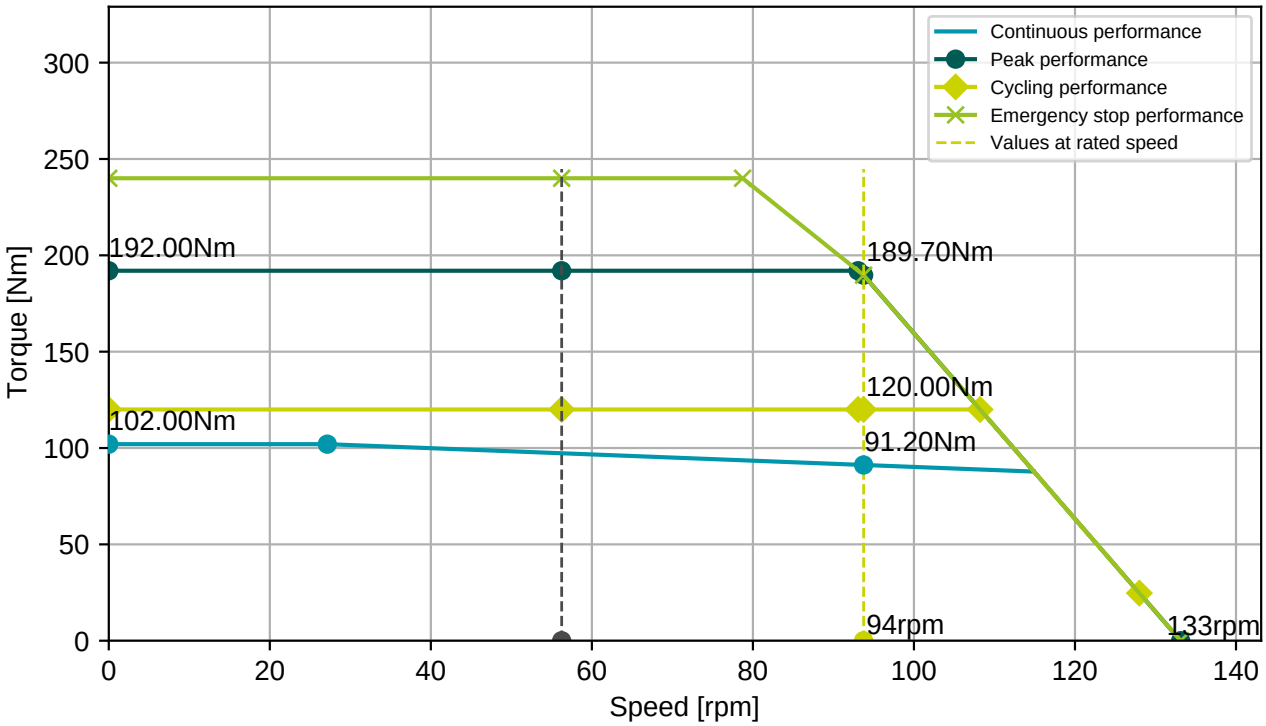

BGC110N00001216000

M23, 8 poles, rotary

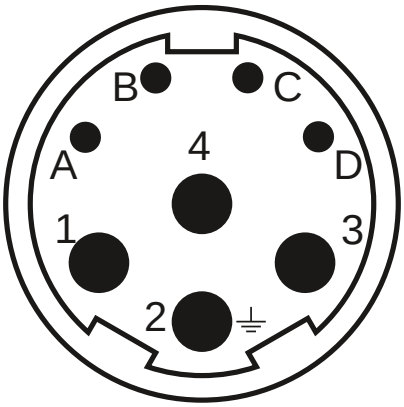

Connector 1 (283)	
1	U
4	V
3	W
2	PE
A	Brake+
B	Brake-
C	GND/DSL-
D	+Us/DSL+

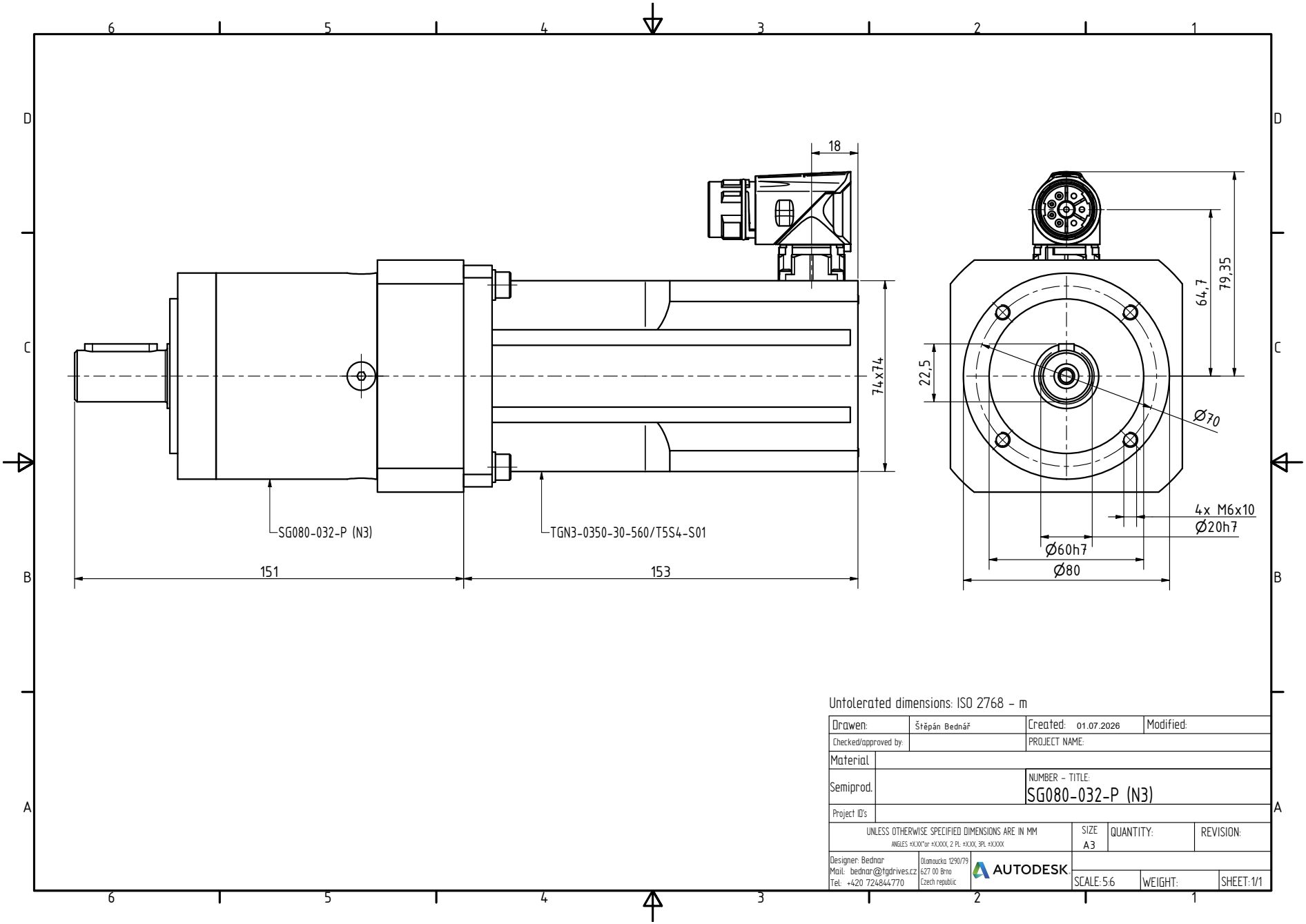

Untolerated dimensions: ISO 2768 - m

Drawen:	Štěpán Bednář	Created: 01.07.2026	Modified:
Checked/approved by:		PROJECT NAME:	
Material			
Semiprod.		NUMBER - TITLE: SG080-032-P (N3)	
Project ID's			
UNLESS OTHERWISE SPECIFIED DIMENSIONS ARE IN MM ANGLES ±X.XX° or ±XXXX, 2 PL ±XXX, 3PL ±XXXX		SIZE A3 / QUANTITY: / REVISION:	
Designer: Bednar Mail: bednar@tgdrives.cz Tel: +420 724844770	Olomoucka 1290/79 627 00 Brno Czech republic	AUTODESK	SCALE: 5:6 / WEIGHT: / SHEET: 1/1

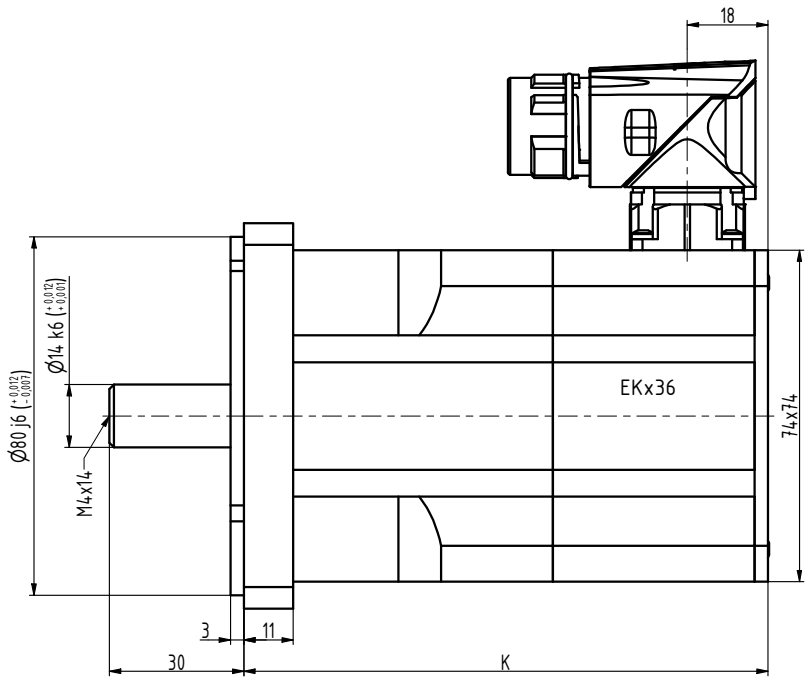

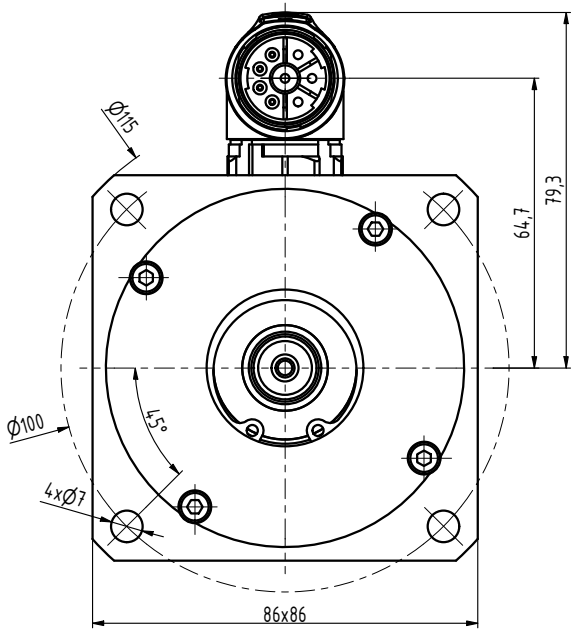

TYP	K
N3-0115	99
N3-0205	117
N3-0280	135
N3-0350	153
N3-0420	171
N3-0480	189

INDEX	ZMĚNA	DATUM	PODPIS		
ZN.MAT.			T.O.	HMOTNOST kg	MĚŘ.
ROZM.-POLOT.					
POM. ZAŘ.				ČSN	TŘ.Č.
VYPR. Ošlejšek		NORM.REF.		POZN.	Č. KUSOVNÍKU
PŘEKR. Ošlejšek 30.05.20201					
TECHNOL.		SCHVÁLIL Ošlejšek	27.10.2017	STARÝ V.	Č.V.
NÁZEV: Motor N3				N3119 06 Z_S4_S1	
				Listů	List

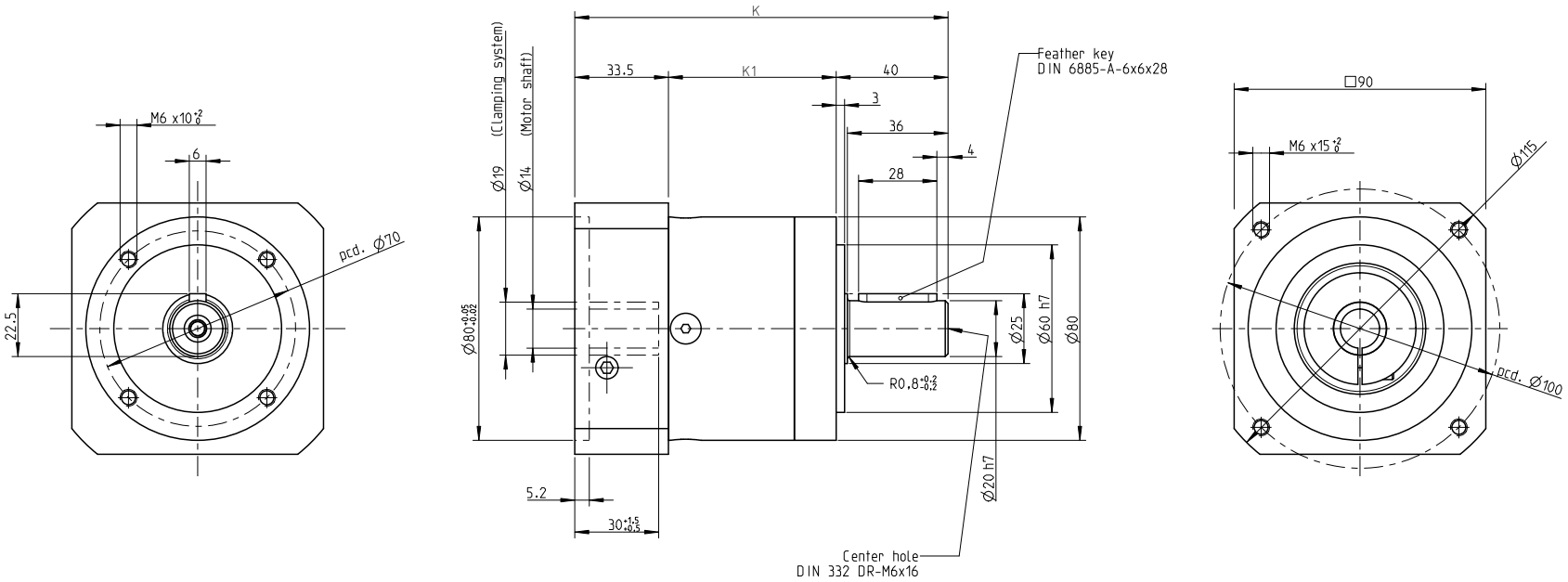

NO OF STAGES	K	K1
I. stage	133,5	60
II. stage	151	77,5
III. stage	168,5	95

INDEX	ZMĚNA	DATUM	PODPIS		
ZM.MAT.			T.O.	HMOTNOST kg	MĚŘ.
ROZM.-POLOT.					
ROZM. ZAŘ.				ČSN	TŘ.Č.
VYPR.		NORM. REF.		POZN.	Č. KUSOVNÍKU
PŘEKR.					
TECHNOL.		SCHVÁLIL.	12.9.2020	STARÝ V.	Č.V.
NÁZEV					
Gearbox SG080				TGN3, TGH3, TGT3	
				Listů	List