Engineering motordata (WIN 719)		
DC bus voltage	560	V DC
Nominal AC voltage	380	V AC (rms)
Rated voltage	269	V AC (rms)
Rated power	635	W
Rated speed	6000	rpm
Rated torque	1.01	Nm
Rated current	1.99	A (rms)
Peak torque	3.45	Nm
Peak current	7.8	A (rms)
Stall torque	1.15	Nm
Stall current	1.78	A (rms)
No load speed	9680	rpm
EMF constant ±10%	39	V AC (rms) / 1000rpm
Theoretical torque constant ±10%	0.65	Nm / A (rms)
Torque constant ±10% @ rated load	0.51	Nm / A (rms)
Number of poles	10	
Electrical time constant	2.15	ms
Winding terminal resistance	10.71	Ω
Rotary field terminal inductance	23	mH

Customs info	
HS Code	85015100

Mechanical motor data (setting 48)		
Max mechanical speed	12000	rpm
Mech. time constant	1.38	ms
Thermal time constant	21	min
Rotor inertia	0.31	kgcm²
Protection	IP64	
Color	RAL 9005	
Cooling	Convection	
Motor-only mass	2	kg
Max. axial force 20kh	43	N
Max. radial force 20kh*	225	N
Max. axial force 100kh	25	N
Max. radial force 100kh*	131	N

** Defined for point of action at ½ output shaft length*

Sensors	
Temperature	PT1000 {PT1000}
Feedback	EKM36 (HDSL) multi-turn, 17 + 12 bits

Gearbox engineering data		
Gear ratio	32	
Efficiency*	92	%
Torsional stiffness	4.8	Nm/arcmin
Number of stages	2	
Rated output torque	38	Nm
Cycling output torque	77	Nm
Max output torque	103	Nm
Emergency output torque	150	Nm
Rated input speed	4500	rpm
Max input speed	10000	rpm
Operating temperature	<-25; 90>	°C
Max. backlash	< 5	arcmin
Service life	20000	h

** at rated speed & torque*

Lubrication	
Type	Standard
Lubricant	Oil (lifetime lubrication)

Gearbox mechanical data		
Radial force for 20'000h*	3200	N
Axial force for 20'000h	4400	N
Output shaft design	Shaft key	
Mass	2.47	kg
Input inertia	0.213	kgcm²
Protection	IP65	

** Defined for point of action at ½ output shaft length*

Actuator data		
Rated speed	141	rpm
Rated torque	30.76	Nm
Cycling torque	77.00	Nm
Peak torque	101.57	Nm
Emergency stop torque	110.40	Nm
EMF constant ±10%	1248.0	V AC (rms) / 1000rpm
Torque constant ±10% @ rated load	14.94	Nm / A (rms)
Total mass	4.47	kg
Output inertia	535.6	kgcm²

Torque / speed curve

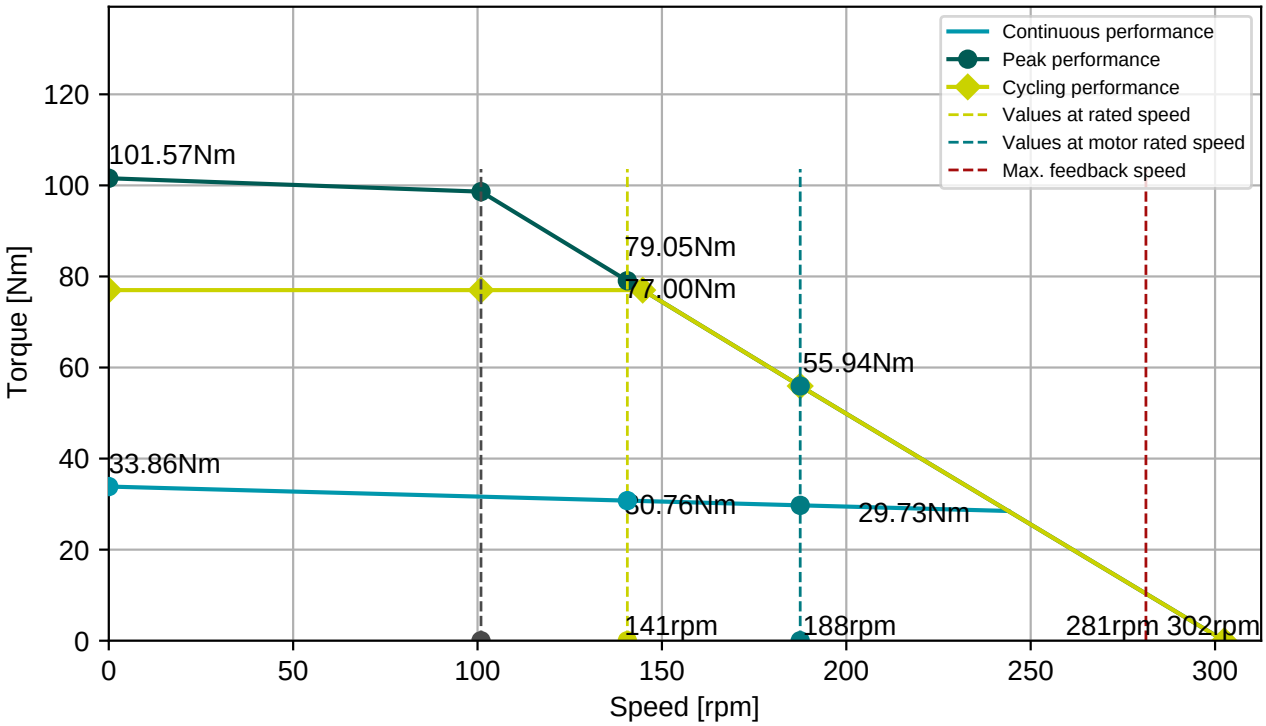

BGC110N00001216000

M23, 8 poles, rotary

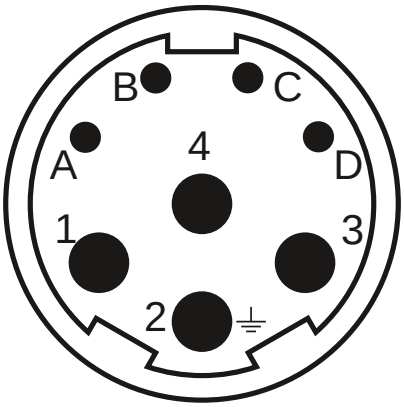

Connector 1 (283)	
1	U
4	V
3	W
2	PE
A	Brake+
B	Brake-
C	GND/DSL-
D	+Us/DSL+

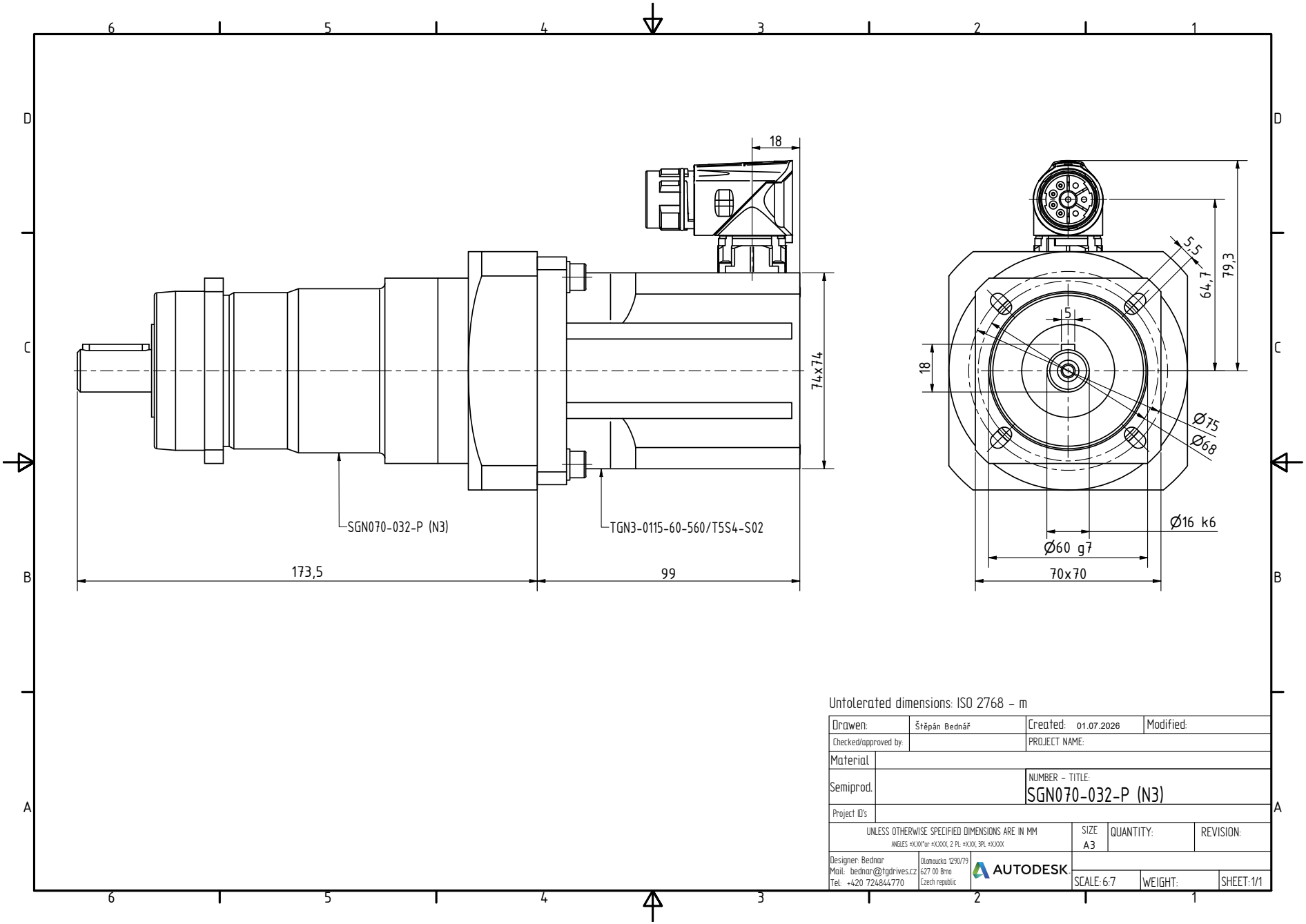

Untolerated dimensions: ISO 2768 - m

Drawen:	Štěpán Bednář	Created: 01.07.2026	Modified:
Checked/approved by:		PROJECT NAME:	
Material			
Semiprod.		NUMBER - TITLE: SGN070-032-P (N3)	
Project ID's			
UNLESS OTHERWISE SPECIFIED DIMENSIONS ARE IN MM ANGLES ±X.XX° or ±X.XXX, 2 PL ±X.XX, 3PL ±X.XXX		SIZE A3 / QUANTITY: / REVISION:	
Designer: Bednar Mail: bednar@tgdrives.cz Tel: +420 724844770	Olomoucka 1290/79 627 00 Brno Czech republic	AUTODESK	SCALE: 6:7 / WEIGHT: / SHEET: 1/1

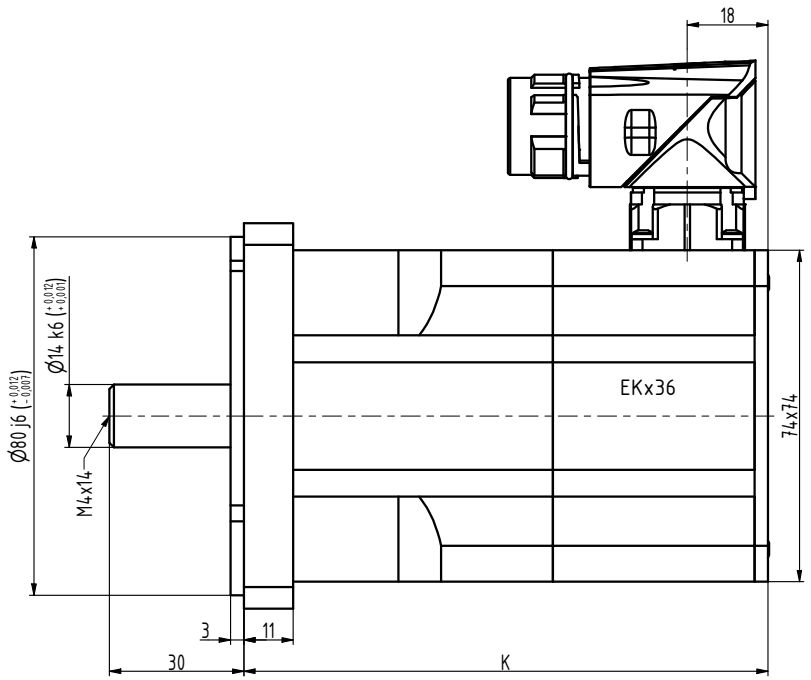

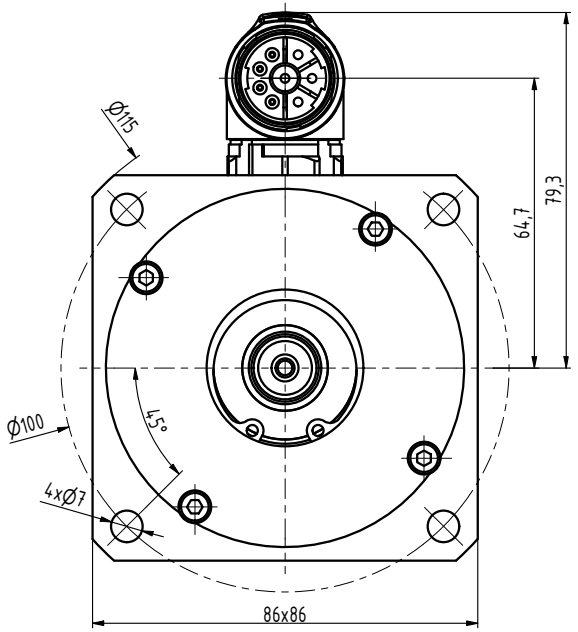

TYP	K
N3-0115	99
N3-0205	117
N3-0280	135
N3-0350	153
N3-0420	171
N3-0480	189

INDEX	ZMĚNA	DATUM	PODPIS		
ZN.MAT.			T.O.	HMOTNOST kg	MĚŘ.
ROZM.-POLOT.					
POM. ZAŘ.				ČSN	TŘ.Č.
VYPR. Ošlejšek		NORM.REF.		POZN.	Č. KUSOVNÍKU
PŘEKR. Ošlejšek 30.05.20201					
TECHNOL.		SCHVÁLIL Ošlejšek	27.10.2017	STARÝ V.	Č.V.
NÁZEV: Motor N3				N3119 06 Z_S4_S1	
				Listů	List

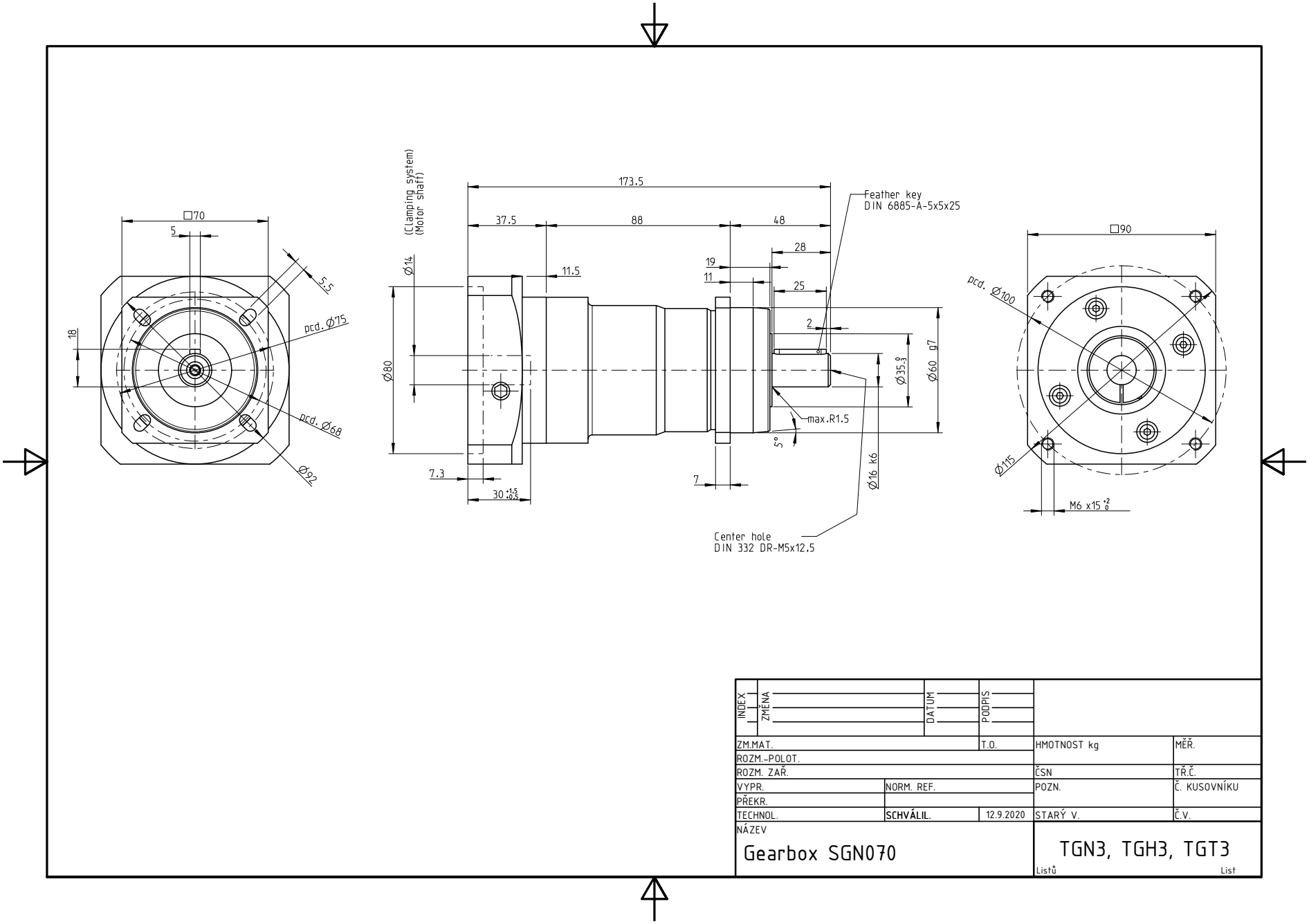

INDEX	ZMĚNA	DATUM	PODPIS	

ZM.MAT.		T.O.	HMOTNOST kg	MĚŘ.
ROZM.-POLOT.				
ROZM. ZAŘ.			ČSN	TŘ.Č.
VYPR.	NORM. REF.		POZN.	Č. KUSOVNÍKU
PŘEKR.				
TECHNOL.	SCHVÁLIL.	12.9.2020	STARÝ V.	Č.V.

NÁZEV

Gearbox SGN070

TGN3, TGH3, TGT3

Listů List