Engineering motordata (WIN 729)		
DC bus voltage	560	V DC
Nominal AC voltage	380	V AC (rms)
Rated voltage	291	V AC (rms)
Rated power	3.3	kW
Rated speed	3000	rpm
Rated torque	10.50	Nm
Rated current	8.25	A (rms)
Peak torque	36	Nm
Peak current	29.4	A (rms)
Stall torque	12	Nm
Stall current	8	A (rms)
No load speed	4170	rpm
EMF constant ±10%	91	V AC (rms) / 1000rpm
Theoretical torque constant ±10%	1.51	Nm / A (rms)
Torque constant ±10% @ rated load	1.27	Nm / A (rms)
Number of poles	10	
Electrical time constant	8.20	ms
Winding terminal resistance	1.33	Ω
Rotary field terminal inductance	10.9	mH

Customs info	
HS Code	85015220

Mechanical motor data (setting 48)		
Max mechanical speed	9000	rpm
Mech. time constant	0.80	ms
Thermal time constant	45	min
Rotor inertia	7.9	kgcm²
Protection	IP64	
Color	RAL 9005	
Cooling	Convection	
Motor-only mass	11.2	kg
Max. axial force 20kh	126	N
Max. radial force 20kh*	665	N
Max. axial force 100kh	74	N
Max. radial force 100kh*	389	N

** Defined for point of action at ½ output shaft length*

Sensors	
Temperature	PT1000 {PT1000}
Feedback	EKS36 (HDSL) single-turn, 17 bits

Gearbox engineering data		
Gear ratio	32	
Efficiency*	95	%
Torsional stiffness	22	Nm/arcmin
Number of stages	2	
Rated output torque	220	Nm
Cycling output torque	260	Nm
Max output torque	415	Nm
Emergency output torque	520	Nm
Rated input speed	3500	rpm
Max input speed	6500	rpm
Operating temperature	<-25; 90>	°C
Max. backlash	< 9	arcmin
Service life	20000	h

** at rated speed & torque*

Lubrication	
Type	Standard
Lubricant	Grease (lifetime lubrication)

Gearbox mechanical data		
Radial force for 20'000h*	1750	N
Radial force for 30'000h*	1500	N
Max. radial force*	2000	N
Axial force for 20'000h	2500	N
Axial force for 30'000h	2100	N
Max. axial force	3800	N
Tilting moment for 20'000h	101	Nm
Tilting moment for 30'000h	86	Nm
Max. bending moment	40	Nm
Output shaft design	Shaft key	
Mass	7.54	kg
Input inertia	1.42	kgcm²
Protection	IP54	

** Defined for point of action at ½ output shaft length*

Actuator data		
Rated speed	94	rpm
Rated torque	220.00	Nm
Cycling torque	260.00	Nm
Peak torque	415.00	Nm
Emergency stop torque	520.00	Nm
EMF constant ±10%	2912.0	V AC (rms) / 1000rpm
Torque constant ±10% @ rated load	38.69	Nm / A (rms)
Total mass	18.74	kg
Output inertia	9543.7	kgcm²

Torque / speed curve

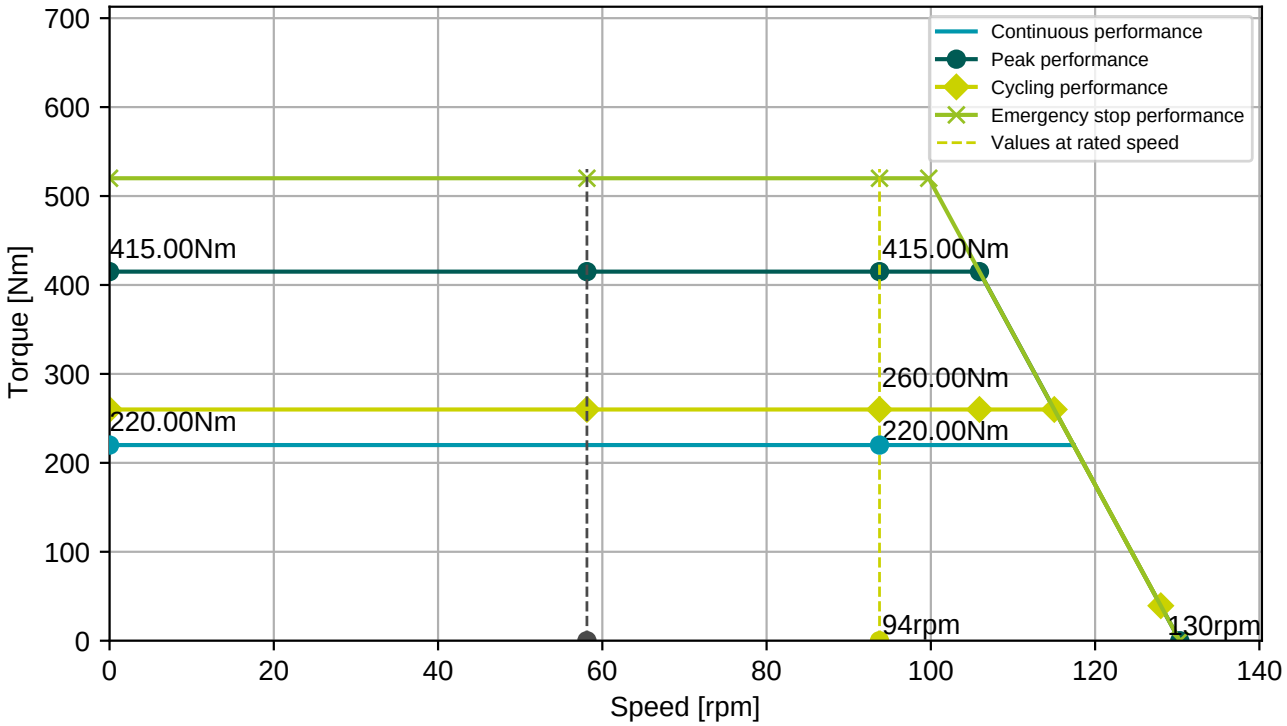

BGC110N00001216000

M23, 8 poles, rotary

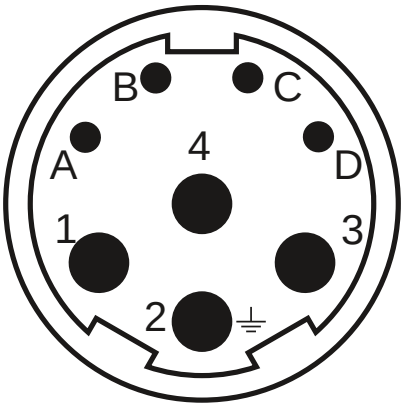

Connector 1 (283)	
1	U
4	V
3	W
2	PE
A	Brake+
B	Brake-
C	GND/DSL-
D	+Us/DSL+

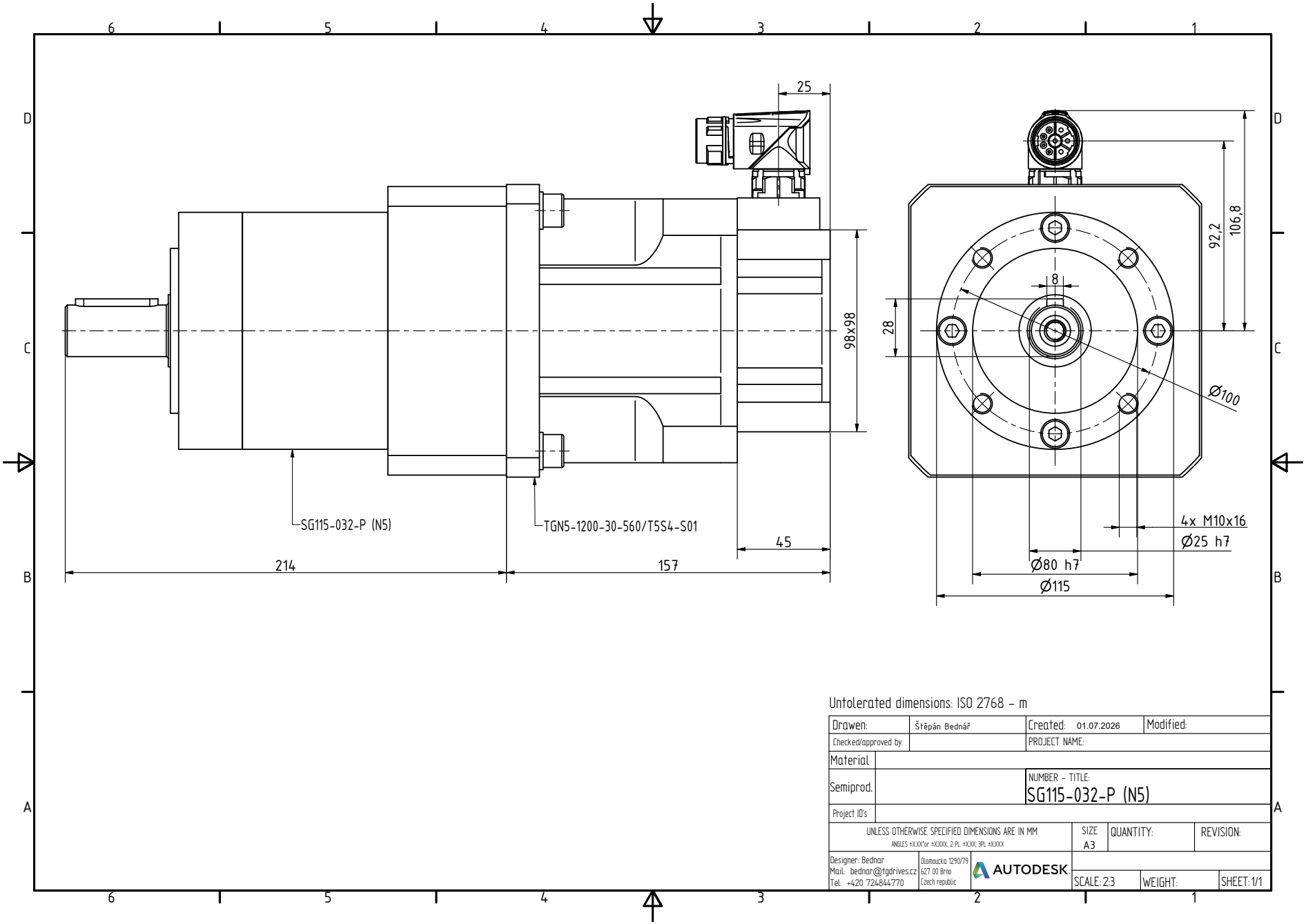

Untolerated dimensions: ISO 2768 - m

Drawen:	Štěpán Bednář	Created: 01.07.2026	Modified:
Checked/approved by:		PROJECT NAME:	
Material			
Semiprod.		NUMBER - TITLE: SG115-032-P (N5)	
Project ID's			
UNLESS OTHERWISE SPECIFIED DIMENSIONS ARE IN MM ANGLES ±XXX°or ±XXXX, 2 PL ±XXX, 3PL ±XXXX		SIZE A3	QUANTITY: / REVISION:
Designer: Bednar Mail: bednar@tgdrives.cz Tel: +420 724844770	Olomoucka 1290/79 627 00 Brno Czech republic	AUTODESK	SCALE: 2:3 / WEIGHT: / SHEET: 1/1

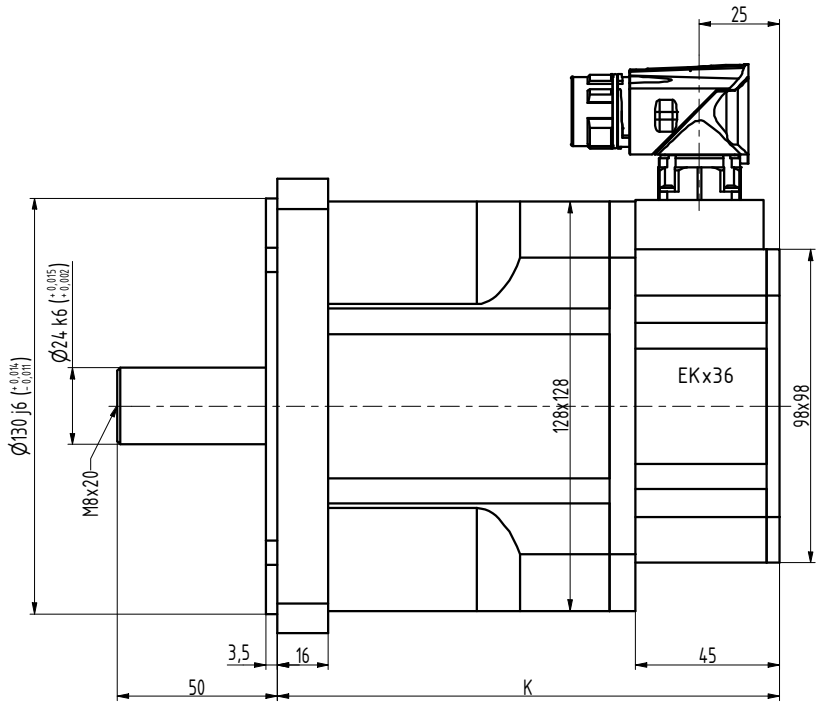

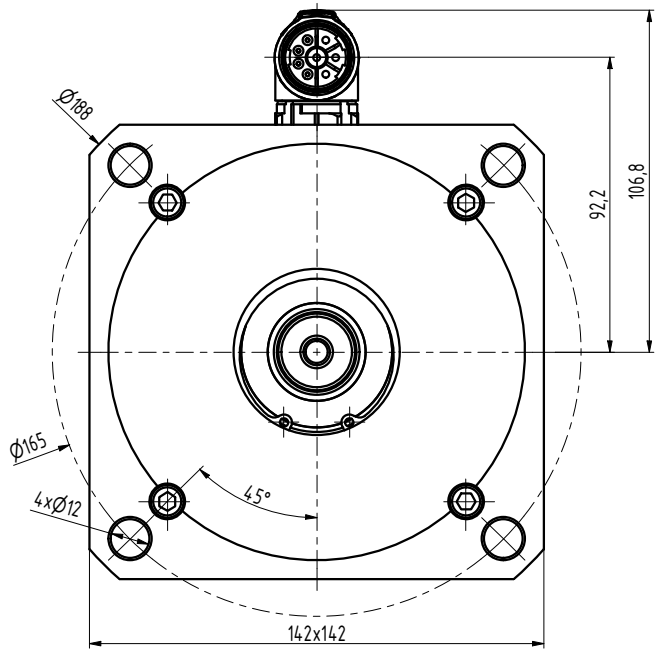

TYP	K
N5-0650	127
N5-1200	157
N5-1600	187
N5-2000	217
N5-2400	247

INDEX	ZMĚNA	DATUM	PODPIS

ZN.MAT.		T.O.	HMOTNOST kg	MĚŘ.
ROZM.-POLOT.				
POM. ZAŘ.			ČSN	TŘ.Č.
VYPR. Ošlejšek	NORM.REF.		POZN.	Č. KUSOVNÍKU
PŘEKR.				
TECHNOL.	SCHVÁLIL Ošlejšek	10.09.2021	STARÝ V.	Č.V.

NÁZEV
Motor N5

N5087 10 Z_S4_S1

Listů List

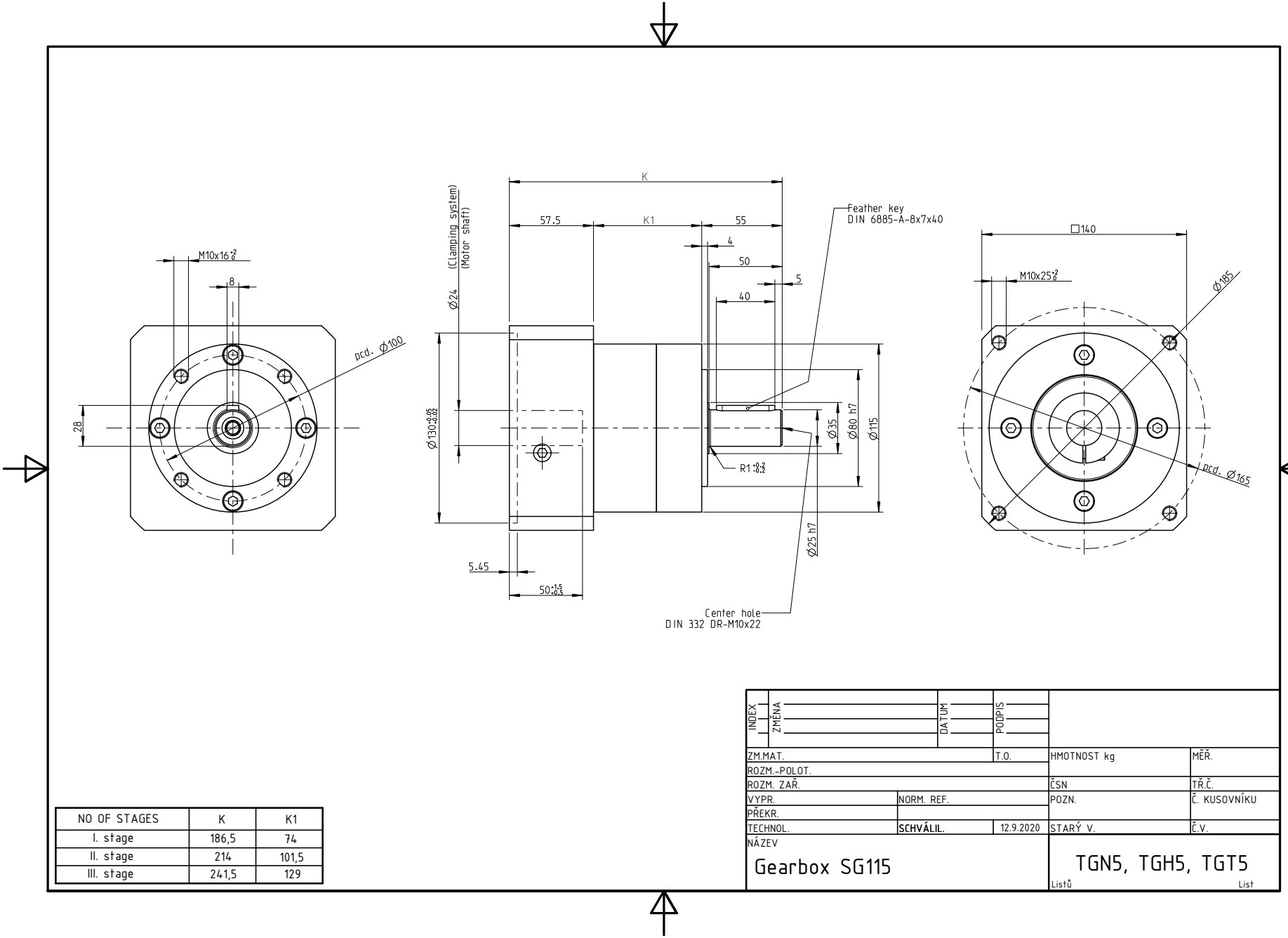

NO OF STAGES	K	K1
I. stage	186,5	74
II. stage	214	101,5
III. stage	241,5	129

INDEX	ZMĚNA	DATUM	PODPIS		
ZM.MAT.			T.O.	HMOTNOST kg	MĚŘ.
ROZM.-POLOT.					
ROZM. ZAŘ.				ČSN	TŘ.Č.
VYPR.		NORM. REF.		POZN.	Č. KUSOVNÍKU
PŘEKR.					
TECHNOL.		SCHVÁLIL.	12.9.2020	STARÝ V.	Č.V.
NÁZEV	Gearbox SG115			TGN5, TGH5, TGT5	
				Listů	List