Engineering data (WIN -100095)		
DC bus voltage	48	V DC
Nominal AC voltage	33	V AC (rms)
Rated voltage	29	V AC (rms)
Rated power	744	W
Rated speed	1000	rpm
Rated torque	7.10	Nm
Rated current	20.56	A (rms)
Peak torque	22.5	Nm
Peak current	82.74	A (rms)
Stall torque	7.5	Nm
Stall current	19.3	A (rms)
No load speed	1390	rpm
EMF constant ±10%	23.5	V AC (rms) / 1000rpm
Theoretical torque constant ±10%	0.39	Nm / A (rms)
Torque constant ±10% @ rated load	0.35	Nm / A (rms)
Number of poles	10	
Electrical time constant	5.82	ms
Winding terminal resistance	0.17	Ω
Rotary field terminal inductance	0.99	mH

Customs info	
HS Code	85015100

Mechanical data (setting 29)		
Max mechanical speed	9000	rpm
Mech. time constant	0.64	ms
Thermal time constant	30	min
Rotor inertia	3.26	kgcm²
Protection	IP65	
Color	EPOX3 (RAL 9005)	
Cooling	Convection	
Max. axial force 20kh	179	N
Max. radial force 20kh*	942	N
Max. axial force 100kh	105	N
Max. radial force 100kh*	551	N

** Defined for point of action at ½ output shaft length*

Sensors	
Temperature	PT1000 {PT1000}
Feedback	ELM35 (24+12 bits, BISS-C, multi-turn)

Brake		
Braking torque	9.00	Nm
Voltage	24	V DC
Power @20°C	18.0	W
Current @20°C	0.75	A
Inertia	0.60	kgcm²
Mass	0.82	kg

Torque / speed curve

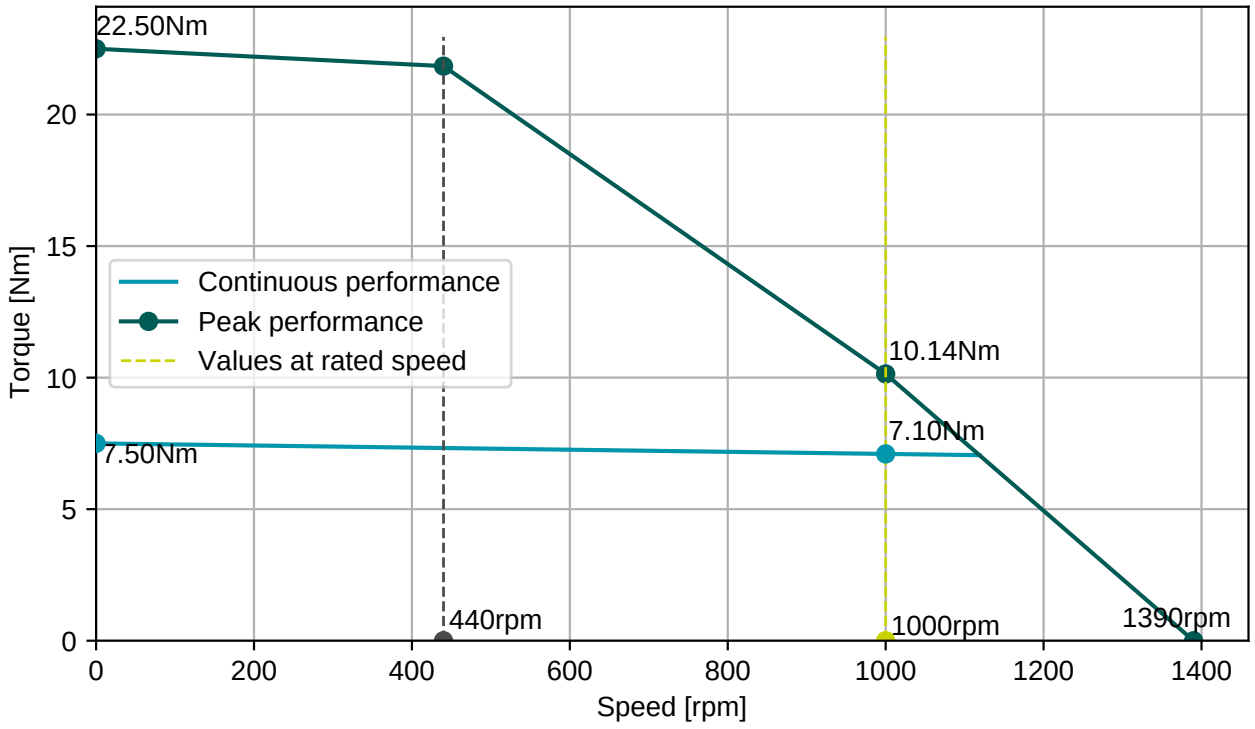

BFC110N00000207000
M23, 8 poles, rectangular

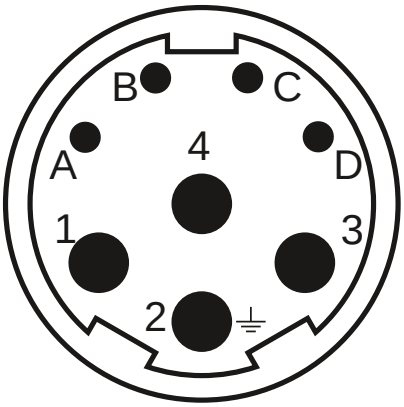

AFC114N00000214000
M23, 12 poles, rectangular

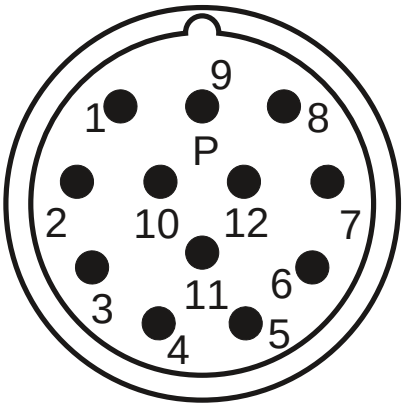

Connector 1 (9)	
1	U
4	V
3	W
2	PE
A	Brake+
B	Brake-
C	
D	

Connector 2 (458)	
1	Vcc
2	GND
3	DATA
4	DATA-
5	CLOCK
6	CLOCK-
7	Therm+
8	Therm-

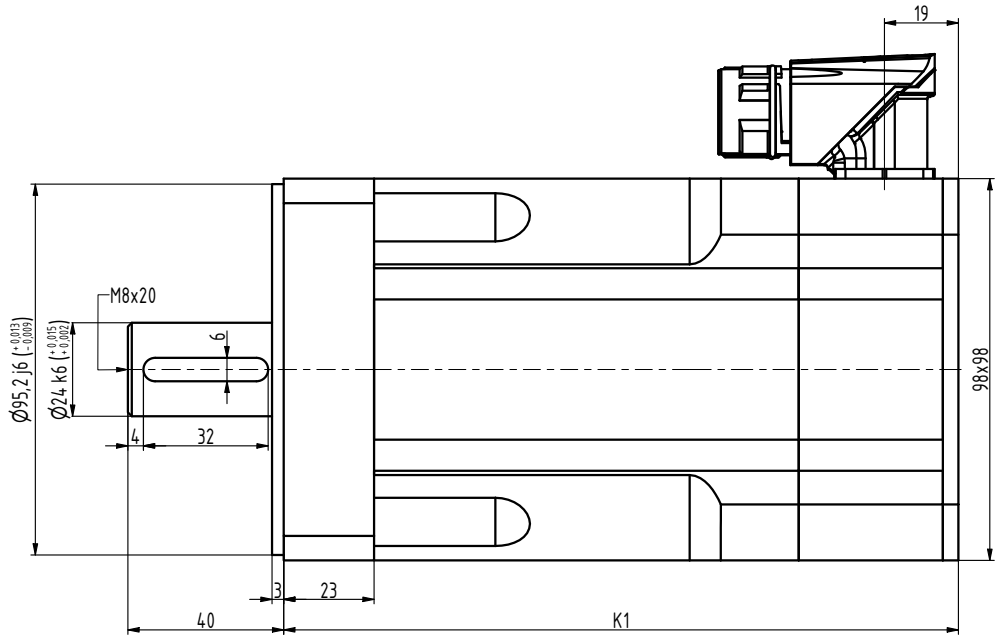

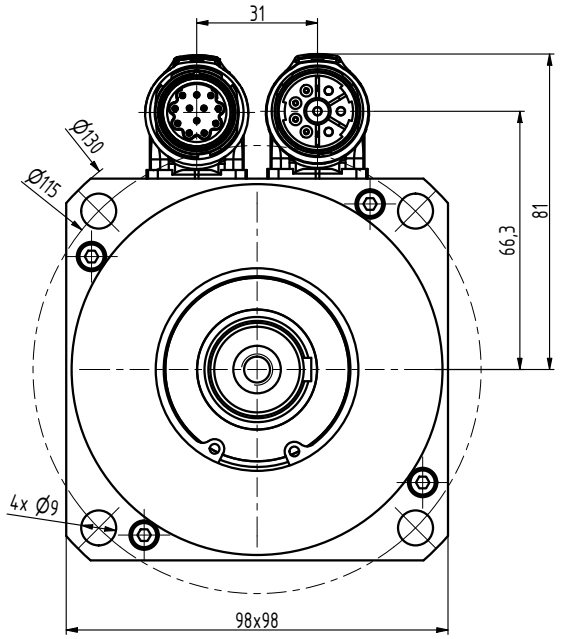

TYP	K1
N4-0340	158
N4-0510	173
N4-0750	203
N4-0960	233
N4-1130	263

INDEX	ZMĚNA	DATUM	PODPIS

ZN.MAT.		T.O.	HMOTNOST kg	MĚŘ.	
ROZM.-POLOT.					
POM. ZAŘ.			ČSN	TŘ.Č.	
VYPR.	NORM.REF.		POZN.	Č. KUSOVNÍKU	
PŘEKR.					
TECHNOL.	SCHVÁLIL	08.07.2026	STARÝ V.	Č.V.	

NÁZEV
Motor N4

N4163 xx BP Z_S1

Listů List