Engineering data (WIN -100093)		
DC bus voltage	48	V DC
Nominal AC voltage	33	V AC (rms)
Rated voltage	30	V AC (rms)
Rated power	738	W
Rated speed	1500	rpm
Rated torque	4.70	Nm
Rated current	21.07	A (rms)
Peak torque	15.3	Nm
Peak current	87.65	A (rms)
Stall torque	5.1	Nm
Stall current	19.27	A (rms)
No load speed	2030	rpm
EMF constant ±10%	16	V AC (rms) / 1000rpm
Theoretical torque constant ±10%	0.26	Nm / A (rms)
Torque constant ±10% @ rated load	0.22	Nm / A (rms)
Number of poles	10	
Electrical time constant	5.43	ms
Winding terminal resistance	0.151	Ω
Rotary field terminal inductance	0.82	mH

Customs info	
HS Code	85015100

Mechanical data (setting 29)		
Max mechanical speed	9000	rpm
Mech. time constant	0.76	ms
Thermal time constant	25	min
Rotor inertia	2.04	kgcm²
Protection	IP65	
Color	EPOX3 (RAL 9005)	
Cooling	Convection	
Max. axial force 20kh	146	N
Max. radial force 20kh*	770	N
Max. axial force 100kh	86	N
Max. radial force 100kh*	450	N

** Defined for point of action at ½ output shaft length*

Sensors	
Temperature	PT1000 {PT1000}
Feedback	ELM35 (24+12 bits, BISS-C, multi-turn)

Brake		
Braking torque	9.00	Nm
Voltage	24	V DC
Power @20°C	18.0	W
Current @20°C	0.75	A
Inertia	0.60	kgcm²
Mass	0.82	kg

Torque / speed curve

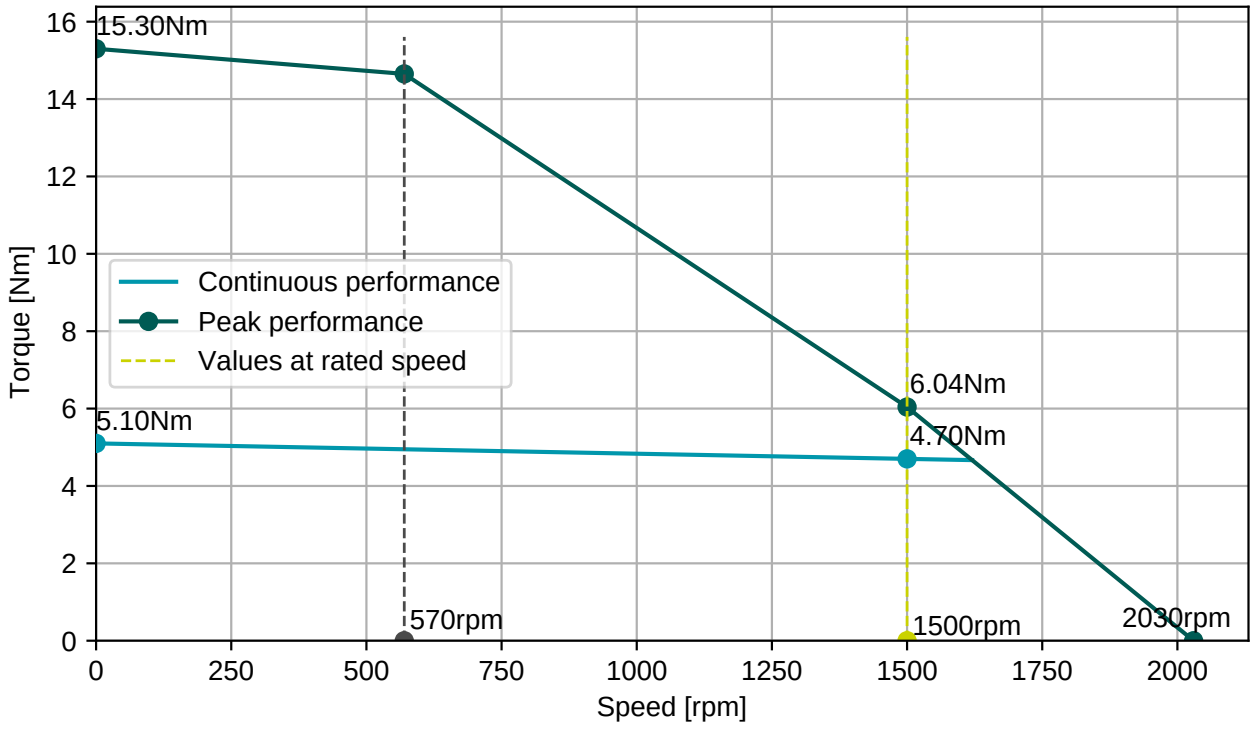

BFC110N00000207000
M23, 8 poles, rectangular

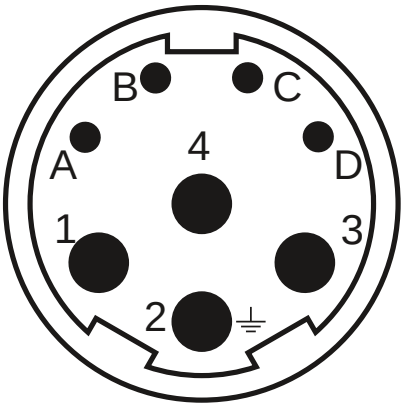

AFC114N00000214000
M23, 12 poles, rectangular

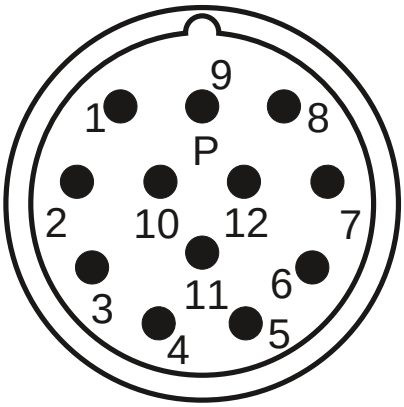

Connector 1 (9)	
1	U
4	V
3	W
2	PE
A	Brake+
B	Brake-
C	
D	

Connector 2 (458)	
1	Vcc
2	GND
3	DATA
4	DATA-
5	CLOCK
6	CLOCK-
7	Therm+
8	Therm-

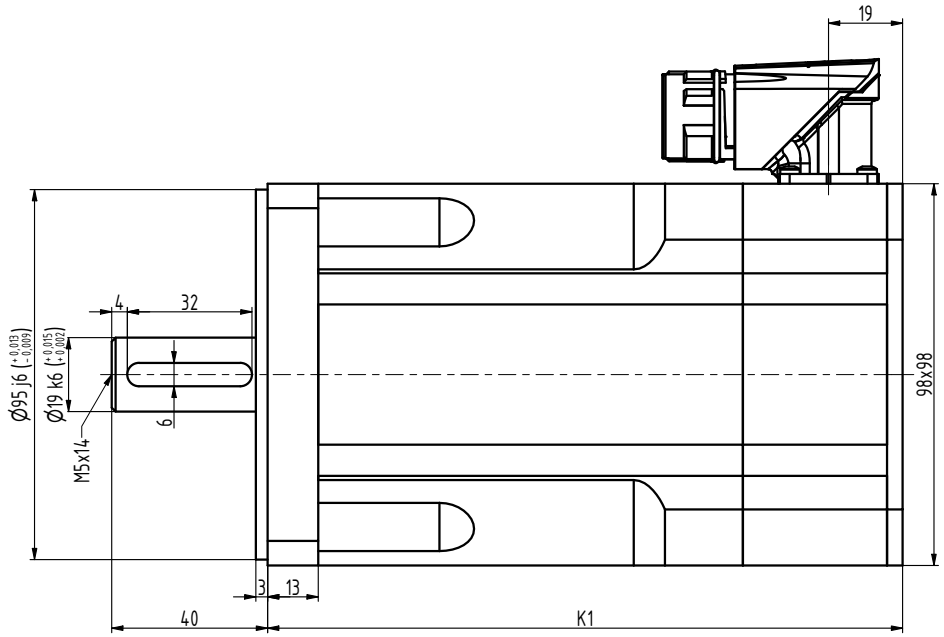

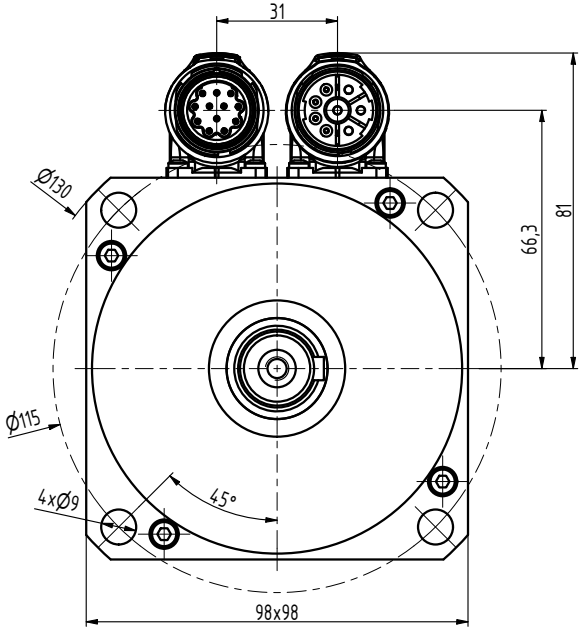

TYP	K1
N4-0340	148
N4-0510	163
N4-0750	193
N4-0960	223
N4-1130	253

INDEX	ZMĚNA	DATUM	PODPIS		
ZN.MAT.			T.O.	HMOTNOST kg	MĚŘ.
ROZM.-POLOT.					
POM. ZAŘ.				ČSN	TŘ.Č.
VYPR.		NORM.REF.		POZN.	Č. KUSOVNÍKU
PŘEKR.					
TECHNOL.		SCHVÁLIL	08.07.2026	STARÝ V.	Č.V.

NÁZEV
Motor N4

N4163 01 BP Z_S1

Listů List