Engineering data (WIN 1142)		
DC bus voltage	48	V DC
Nominal AC voltage	33	V AC (rms)
Rated voltage	26	V AC (rms)
Rated power	351	W
Rated speed	1000	rpm
Rated torque	3.35	Nm
Rated current	10.96	A (rms)
Peak torque	10.5	Nm
Peak current	38.2	A (rms)
Stall torque	3.5	Nm
Stall current	10.6	A (rms)
No load speed	1640	rpm
EMF constant ±10%	20	V AC (rms) / 1000rpm
Theoretical torque constant ±10%	0.33	Nm / A (rms)
Torque constant ±10% @ rated load	0.31	Nm / A (rms)
Number of poles	10	
Electrical time constant	2.89	ms
Winding terminal resistance	0.45	Ω
Rotary field terminal inductance	1.3	mH

Customs info	
HS Code	85015100

Mechanical data (setting 29)		
Max mechanical speed	12000	rpm
Mech. time constant	0.74	ms
Thermal time constant	27	min
Rotor inertia	1.04	kgcm²
Protection	IP65	
Color	EPOX3 (RAL 9005)	
Cooling	Convection	
Max. axial force 20kh	108	N
Max. radial force 20kh*	569	N
Max. axial force 100kh	63	N
Max. radial force 100kh*	332	N

** Defined for point of action at ½ output shaft length*

Sensors	
Temperature	PT1000 {PT1000}
Feedback	ELM35 (24+12 bits, BISS-C, multi-turn)

Brake		
Braking torque	4.50	Nm
Voltage	24	V DC
Power @20°C	12.0	W
Current @20°C	0.50	A
Inertia	0.20	kgcm²
Mass	0.47	kg

Torque / speed curve

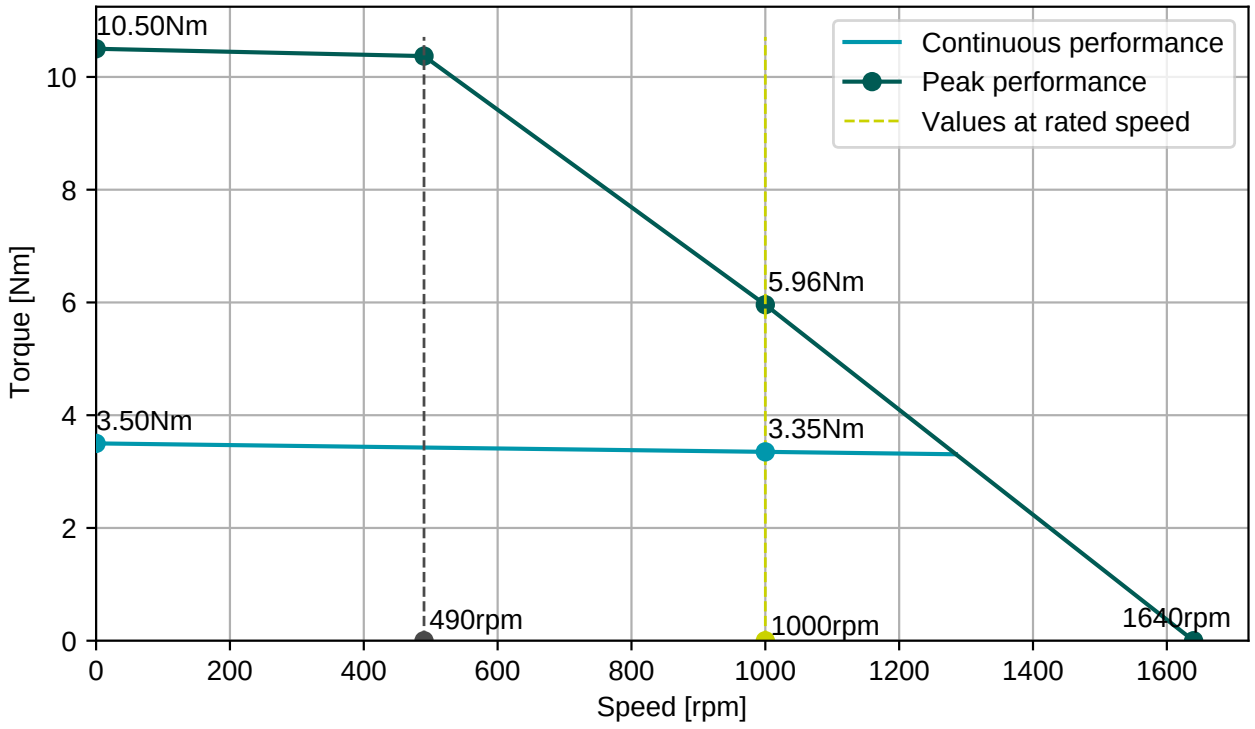

BFC110N00000207000
M23, 8 poles, rectangular

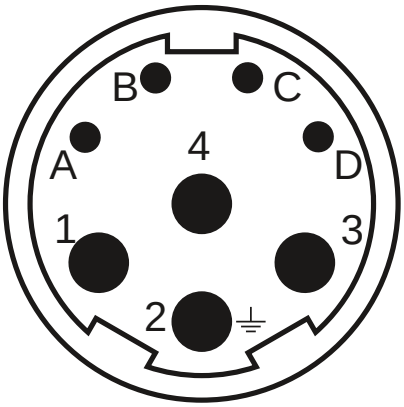

AFC114N00000214000
M23, 12 poles, rectangular

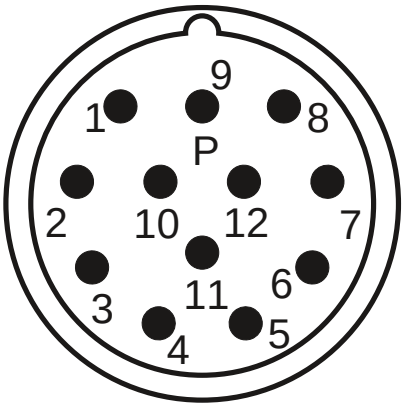

Connector 1 (9)	
1	U
4	V
3	W
2	PE
A	Brake+
B	Brake-
C	
D	

Connector 2 (458)	
1	Vcc
2	GND
3	DATA
4	DATA-
5	CLOCK
6	CLOCK-
7	Therm+
8	Therm-

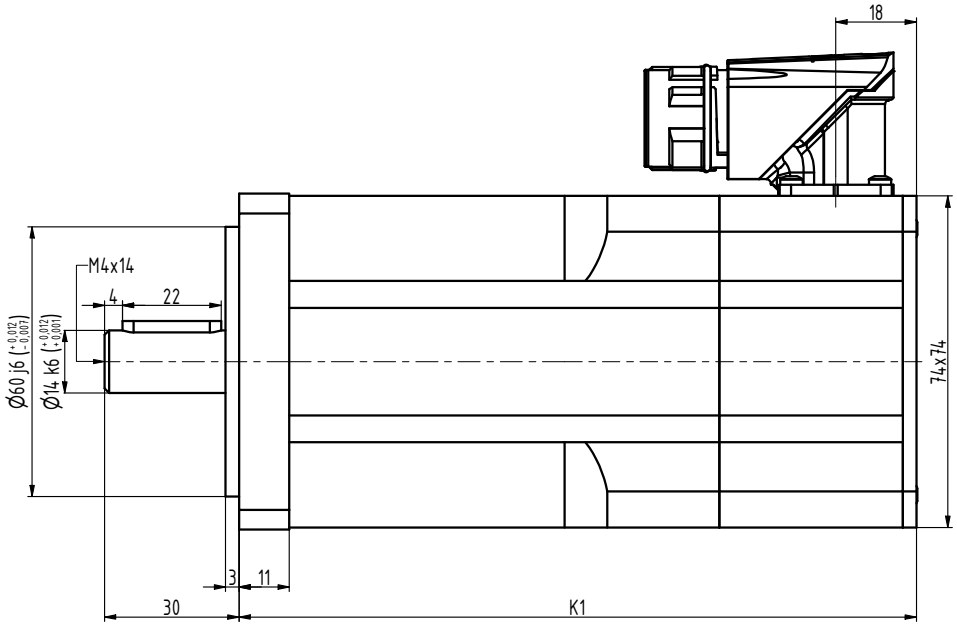

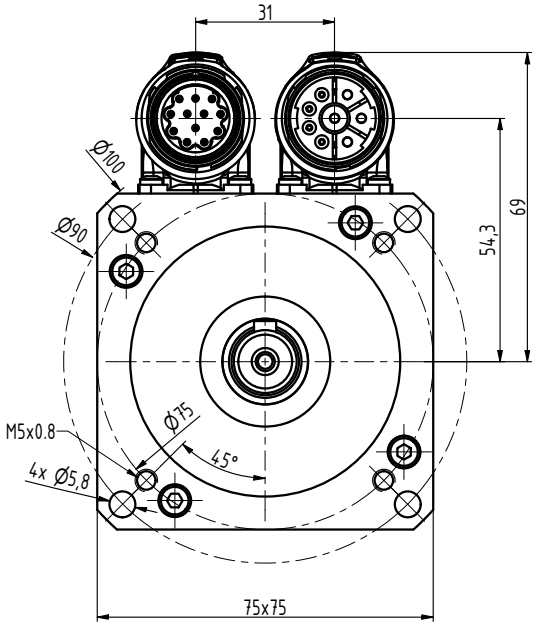

TYP	K1
N3-0115	133
N3-0205	151
N3-0280	169
N3-0350	187
N3-0420	205
N3-0480	223

INDEX	ZMĚNA	DATUM	PODPIS		
ZN.MAT.			T.O.	HMOTNOST kg	MĚŘ.
ROZM.-POLOT.					
POM. ZAŘ.				ČSN	TŘ.Č.
VYPR.		NORM.REF.		POZN.	Č. KUSOVNÍKU
PŘEKR.					
TECHNOL.		SCHVÁLIL	01.07.2026	STARÝ V.	Č.V.
NÁZEV	Motor N3			N3147 xx BP Z_S1	
				Listů	List