Engineering data (WIN -100090)		
DC bus voltage	48	V DC
Nominal AC voltage	33	V AC (rms)
Rated voltage	25	V AC (rms)
Rated power	251	W
Rated speed	1500	rpm
Rated torque	1.60	Nm
Rated current	8.2	A (rms)
Peak torque	6.65	Nm
Peak current	36.03	A (rms)
Stall torque	1.75	Nm
Stall current	8.14	A (rms)
No load speed	2510	rpm
EMF constant ±10%	13	V AC (rms) / 1000rpm
Theoretical torque constant ±10%	0.22	Nm / A (rms)
Torque constant ±10% @ rated load	0.20	Nm / A (rms)
Number of poles	10	
Electrical time constant	1.42	ms
Winding terminal resistance	0.549	Ω
Rotary field terminal inductance	0.78	mH

Customs info	
HS Code	85015100

Mechanical data (setting 29)		
Max mechanical speed	12000	rpm
Mech. time constant	1.40	ms
Thermal time constant	28	min
Rotor inertia	0.68	kgcm²
Protection	IP64	
Color	RAL 9005	
Cooling	Convection	
Motor-only mass	2.2	kg

Sensors	
Temperature	PT1000 {PT1000}
Feedback	EQI1131 (EnDat 2.2) multi-turn, 19 + 12 bits

Brake		
Braking torque	4.50	Nm
Voltage	24	V DC
Power @20°C	12.0	W
Current @20°C	0.50	A
Inertia	0.20	kgcm²
Mass	0.47	kg

Torque / speed curve

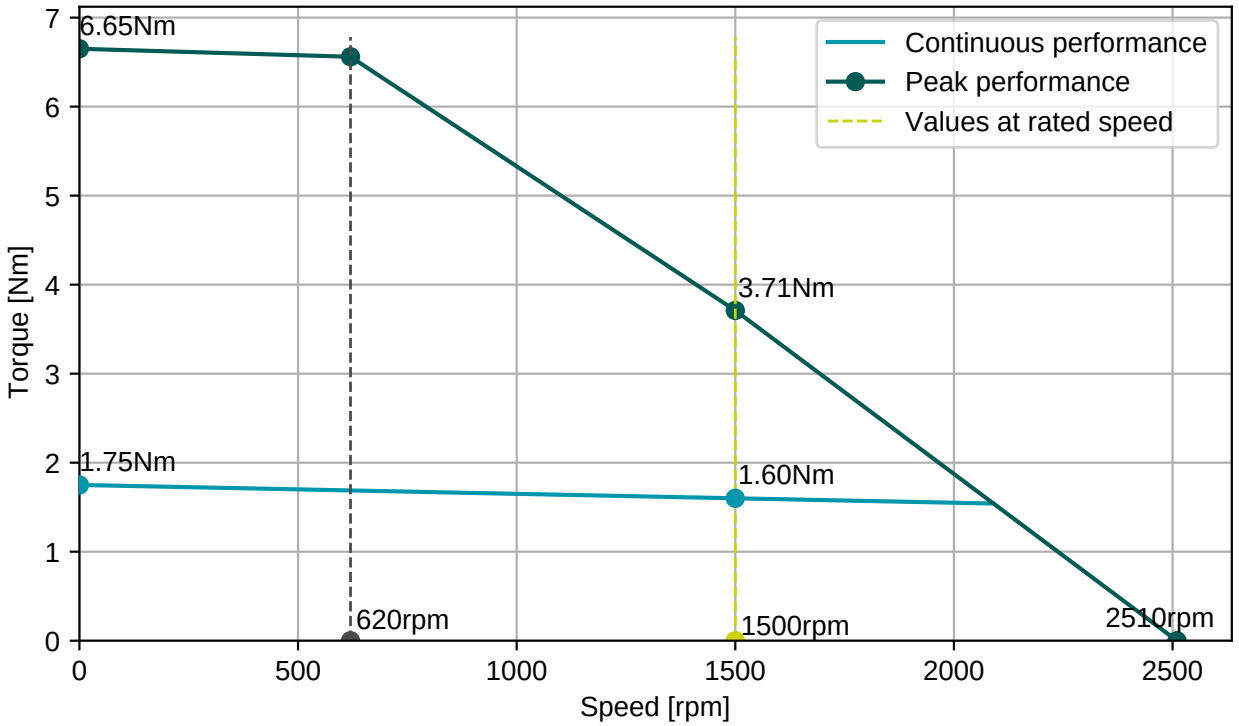

BGC110N00001216000
M23, 8 poles, rotary

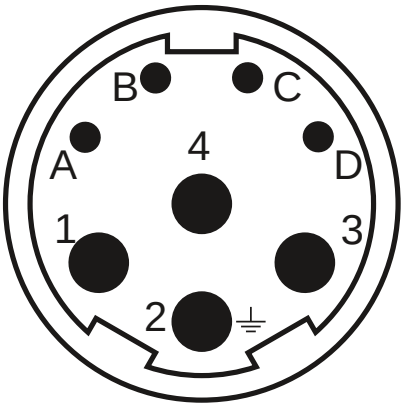

AGC113N00001215000
M23, 17 poles, rotary

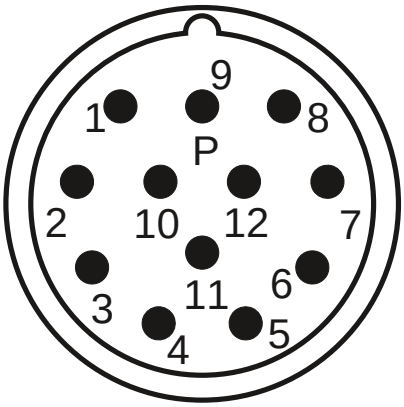

Connector 1 (9)	
1	U
4	V
3	W
2	PE
A	Brake+
B	Brake-
C	
D	

Connector 2 (293)	
1	Vcc (+5V)
2	GND
3	DATA
4	DATA-
5	CLOCK
6	CLOCK-
7	Therm+
8	Therm-
9	Vcc sensor
10	GND sensor

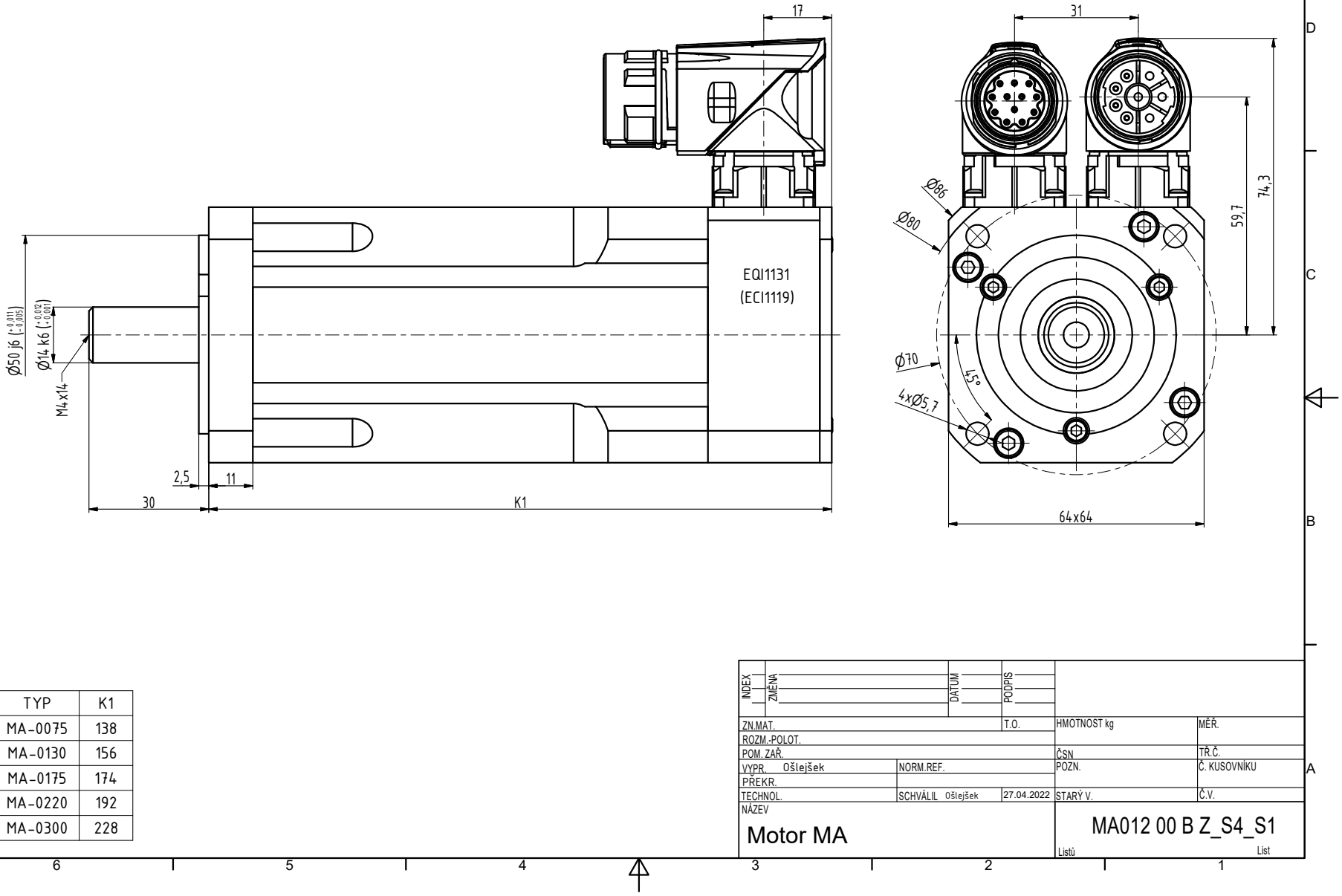

TYP	K1
MA-0075	138
MA-0130	156
MA-0175	174
MA-0220	192
MA-0300	228

INDEX	ZMĚNA	DATUM	PODPIS

ZN.MAT.		T.O.	HMOTNOST kg	MĚŘ.
ROZM.-POLOT.				
POM. ZAŘ.			ČSN	TŘ.Č.
VYPR. Ošlejšek	NORM.REF.		POZN.	Č. KUSOVNÍKU
PŘEKR.				
TECHNOL.	SCHVÁLIL Ošlejšek	27.04.2022	STARÝ V.	Č.V.

NÁZEV

Motor MA

MA012 00 B Z_S4_S1

Listů List