Engineering data (WIN 1593)		
DC bus voltage	320	V DC
Nominal AC voltage	220	V AC (rms)
Rated voltage	151	V AC (rms)
Rated power	1.1	kW
Rated speed	1500	rpm
Rated torque	6.80	Nm
Rated current	5.42	A (rms)
Peak torque	22.5	Nm
Peak current	22.3	A (rms)
Stall torque	7.5	Nm
Stall current	5.2	A (rms)
No load speed	2510	rpm
EMF constant ±10%	87	V AC (rms) / 1000rpm
Theoretical torque constant ±10%	1.439	Nm / A (rms)
Torque constant ±10% @ rated load	1.255	Nm / A (rms)
Number of poles	10	
Electrical time constant	5.89	ms
Winding terminal resistance	2.291	Ω
Rotary field terminal inductance	13.5	mH

Customs info	
HS Code	85015220

Mechanical data (setting 69)		
Max mechanical speed	9000	rpm
Mech. time constant	0.62	ms
Thermal time constant	30	min
Rotor inertia	3.26	kgcm²
Protection	IP64	
Color	RAL 9005	
Cooling	Convection	
Motor-only mass	6.15	kg

Sensors	
Feedback	CFS50-AFV12X05 - 4096 imp./rev.

Note

0542093

Torque / speed curve

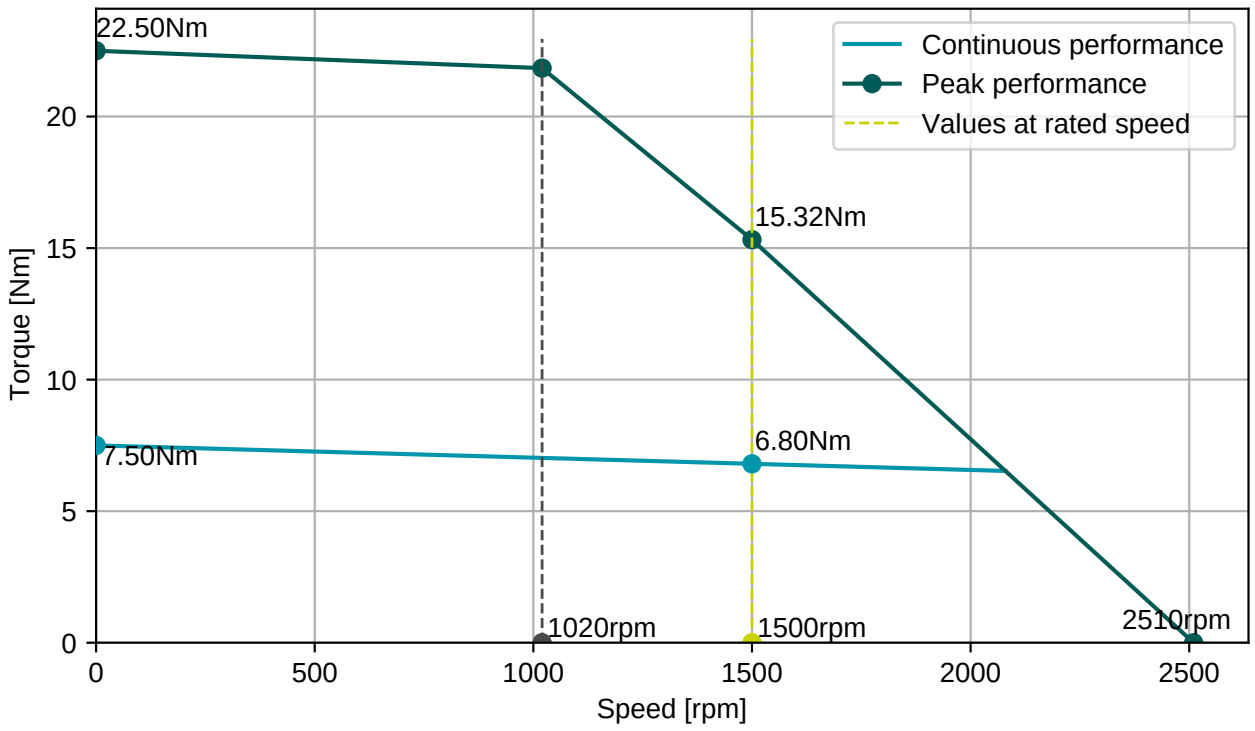

BGC110N00001216000
M23, 8 poles, rotary

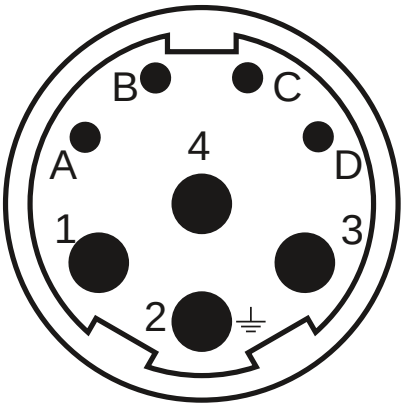

AGC113N00001215000
M23, 17 poles, rotary

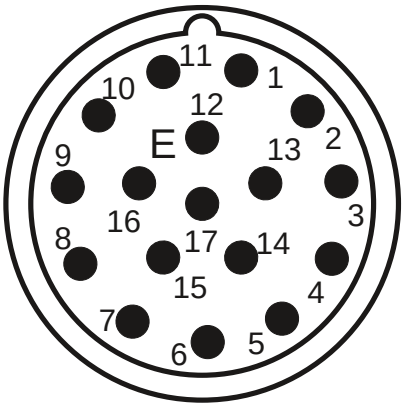

Connector 1 (9)	
1	U
4	V
3	W
2	PE
A	Brake+
B	Brake-
C	
D	

Connector 2 (484)	
1	Schirm/Shield/Stínění
2	SET0
3/4	Us/GND
5/6	A*(K1*)/A(K1)
7/8	B*(K2*)/B(K2)
9/10	Z*(K0*)/Z(K0)
11/12	R*/R
13/14	S/S*
15/16	T*/T

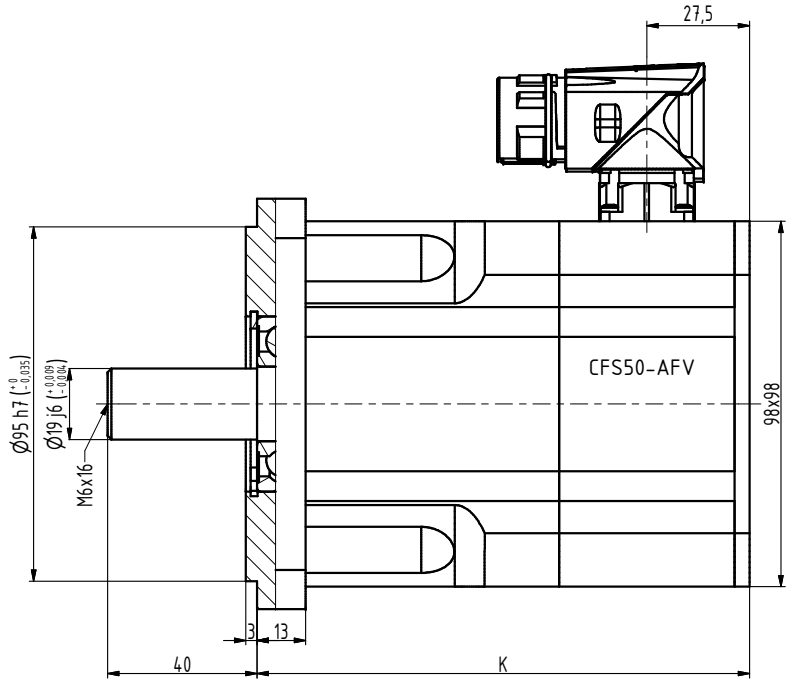

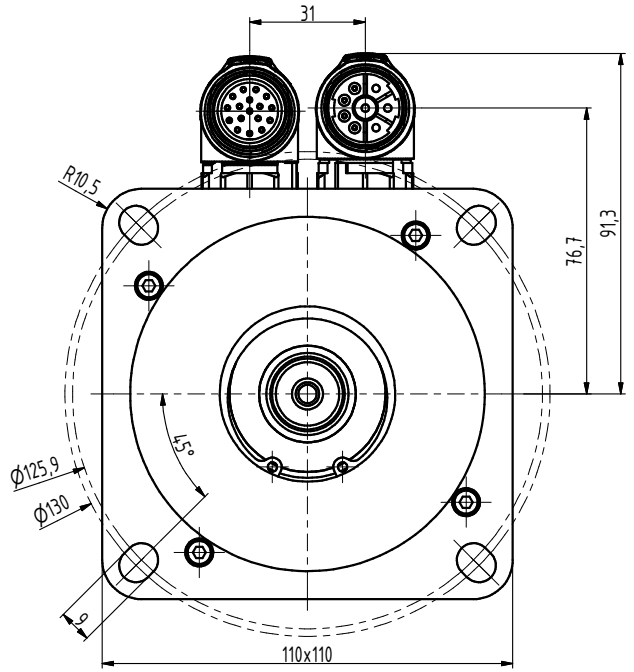

TYP	K
N4-0510	132
N4-0750	162
N4-0960	192
N4-1130	222

INDEX	ZMĚNA	DATUM	PODPIS

ZN.MAT.		T.O.	HMOTNOST kg	MĚŘ.
ROZM.-POLOT.				
POM. ZAŘ.			ČSN	TŘ.Č.
VYPR. Ošlejšek	NORM.REF.		POZN.	Č. KUSOVNÍKU
PŘEKR.				
TECHNOL.	SCHVÁLIL Ošlejšek	13.12.2021	STARÝ V.	Č.V.

NÁZEV

Motor N4

N4212 00 Z_S4_S1

Listů List