Engineering motordata (WIN 924)		
DC bus voltage	560	V DC
Nominal AC voltage	380	V AC (rms)
Rated voltage	278	V AC (rms)
Rated power	2.8	kW
Rated speed	4000	rpm
Rated torque	6.70	Nm
Rated current	7.26	A (rms)
Peak torque	28.8	Nm
Peak current	28.8	A (rms)
Stall torque	9.6	Nm
Stall current	7.7	A (rms)
No load speed	5050	rpm
EMF constant ±10%	75	V AC (rms) / 1000rpm
Theoretical torque constant ±10%	1.24	Nm / A (rms)
Torque constant ±10% @ rated load	0.92	Nm / A (rms)
Number of poles	10	
Electrical time constant	5.87	ms
Winding terminal resistance	1.21	Ω
Rotary field terminal inductance	7.1	mH

Customs info	
HS Code	85015220

Mechanical motor data (setting 48)		
Max mechanical speed	9000	rpm
Mech. time constant	0.61	ms
Thermal time constant	35	min
Rotor inertia	4.49	kgcm²
Protection	IP64	
Color	RAL 9005	
Cooling	Convection	
Max. axial force 20kh	119	N
Max. radial force 20kh*	626	N
Max. axial force 100kh	70	N
Max. radial force 100kh*	366	N

** Defined for point of action at ½ output shaft length*

Sensors	
Temperature	PT1000 {PT1000}
Feedback	EKM36 (HDSL) multi-turn, 17 + 12 bits

Gearbox engineering data		
Gear ratio	16	
Efficiency*	93	%
Torsional stiffness	7.8	Nm/arcmin
Number of stages	2	
Rated output torque	123	Nm
Cycling output torque	150	Nm
Max output torque	240	Nm
Emergency output torque	300	Nm
Rated input speed	1500	rpm
Max input speed	16000	rpm
Operating temperature	<-25; 90>	°C
Max. backlash	< 5	arcmin
Service life	20000	h

** at rated speed & torque*

Lubrication	
Type	Standard
Lubricant	Grease (lifetime lubrication)

Gearbox mechanical data		
Radial force for 20'000h*	5000	N
Axial force for 20'000h	4500	N
Output shaft design	Shaft key	
Mass	6.1	kg
Input inertia	0.887	kgcm²
Protection	IP65	

** Defined for point of action at ½ output shaft length*

Actuator data		
Rated speed	94	rpm
Rated torque	123.00	Nm
Cycling torque	150.00	Nm
Peak torque	240.00	Nm
Emergency stop torque	300.00	Nm
EMF constant ±10%	1200.0	V AC (rms) / 1000rpm
Torque constant ±10% @ rated load	13.73	Nm / A (rms)
Output inertia	1376.5	kgcm²

Torque / speed curve

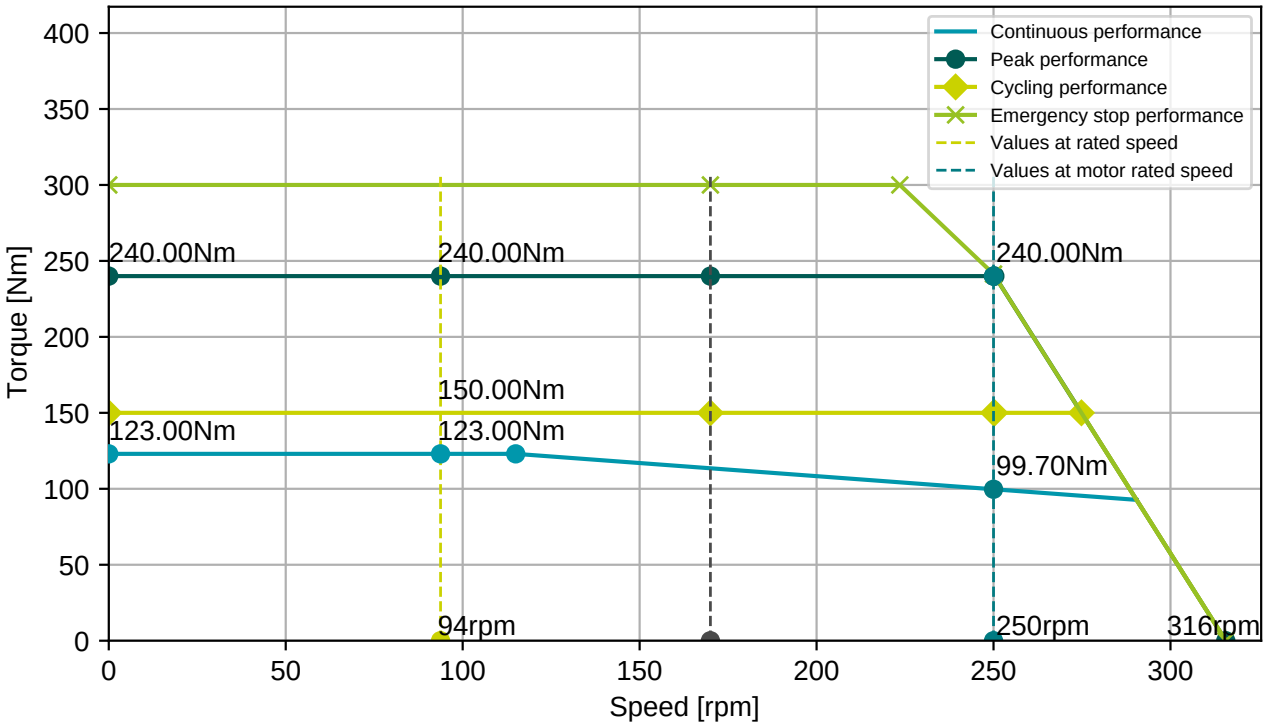

BGC110N00001216000

M23, 8 poles, rotary

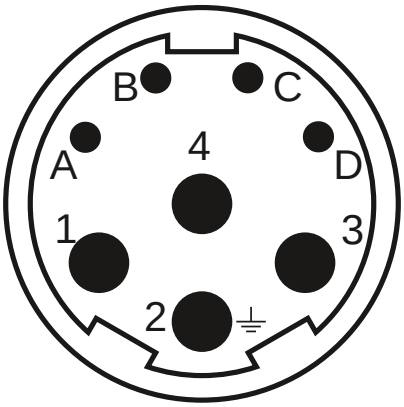

Connector 1 (283)	
1	U
4	V
3	W
2	PE
A	Brake+
B	Brake-
C	GND/DSL-
D	+Us/DSL+

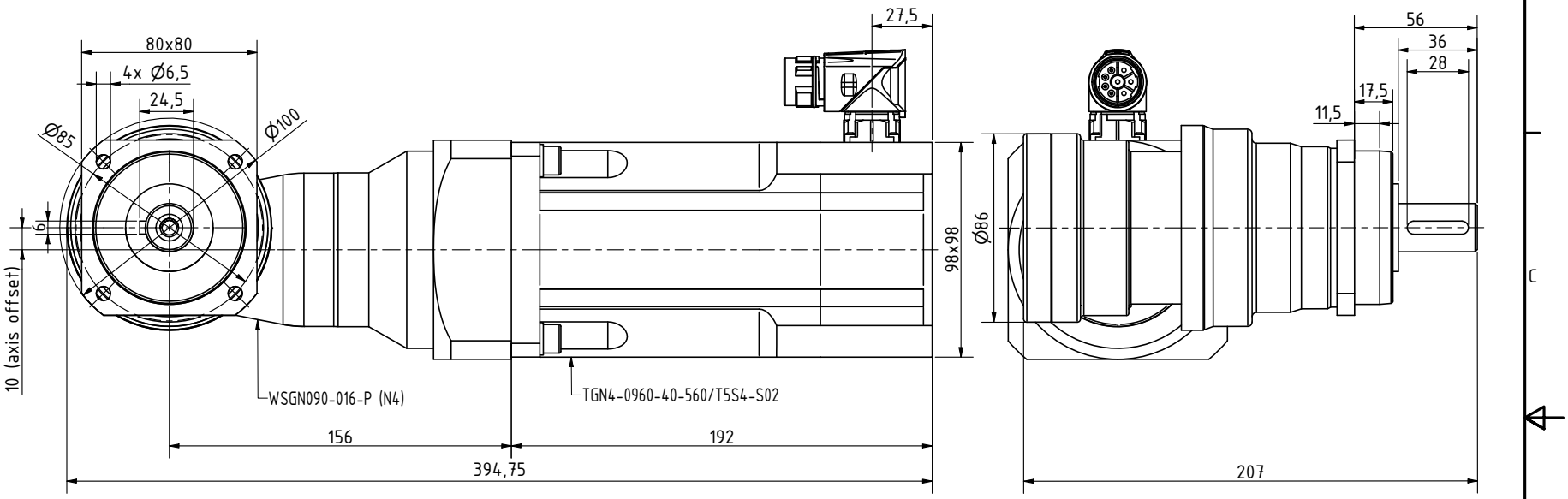

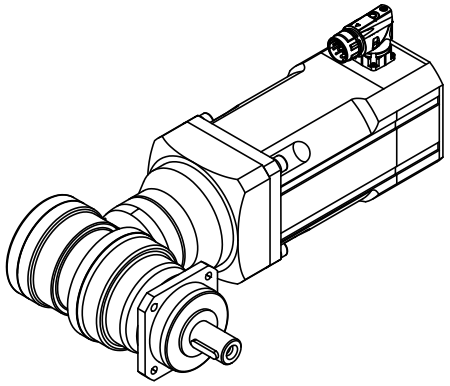

Untolerated dimensions: ISO 2768 - m

Drawen:	Štěpán Bednář	Created: 04.06.2026	Modified:
Checked/approved by:		PROJECT NAME:	
Material			
Semiprod.		NUMBER - TITLE: WSGN090-016-P (N4)	
Project ID's			
UNLESS OTHERWISE SPECIFIED DIMENSIONS ARE IN MM ANGLES ±X,XX° or ±X,XXX, 2 PL ±X,XX, 3PL ±X,XXX		SIZE A3 / QUANTITY:	REVISION:
Designer: Bednar Mail: bednar@tgdrives.cz Tel: +420 724844770	Olomoucka 1290/79 627 00 Brno Czech republic	AUTODESK	SCALE: 4:7 / WEIGHT: / SHEET: 1/1

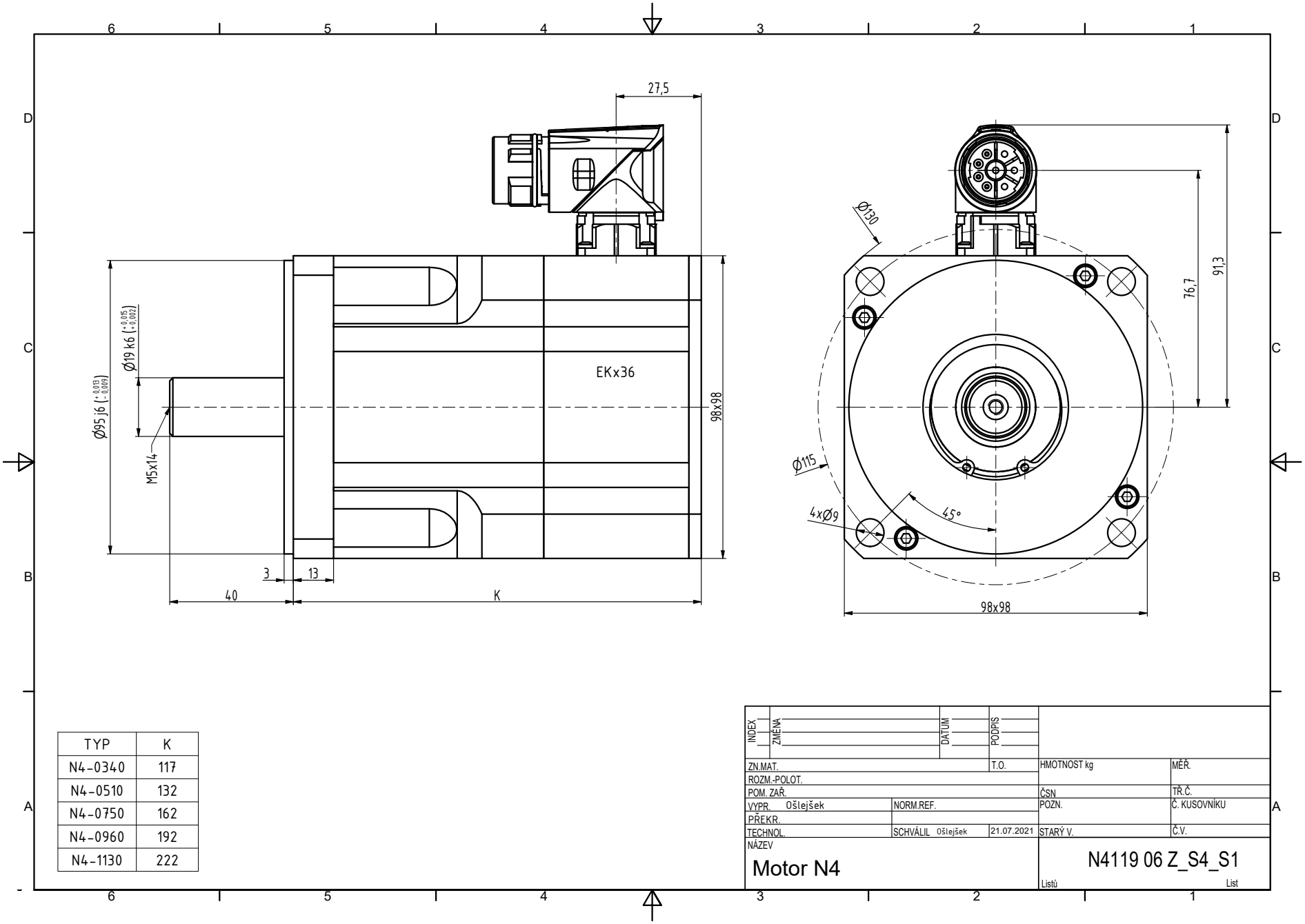

TYP	K
N4-0340	117
N4-0510	132
N4-0750	162
N4-0960	192
N4-1130	222

INDEX	ZMĚNA	DATUM	PODPIS

ZN.MAT.		T.O.	HMOTNOST kg	MĚŘ.
ROZM.-POLOT.				
POM. ZAŘ.			ČSN	TŘ.Č.
VYPR. Ošlejšek	NORM.REF.		POZN.	Č. KUSOVNÍKU
PŘEKR.				
TECHNOL.	SCHVÁLIL Ošlejšek	21.07.2021	STARÝ V.	Č.V.

NÁZEV
Motor N4

N4119 06 Z_S4_S1

Listů List

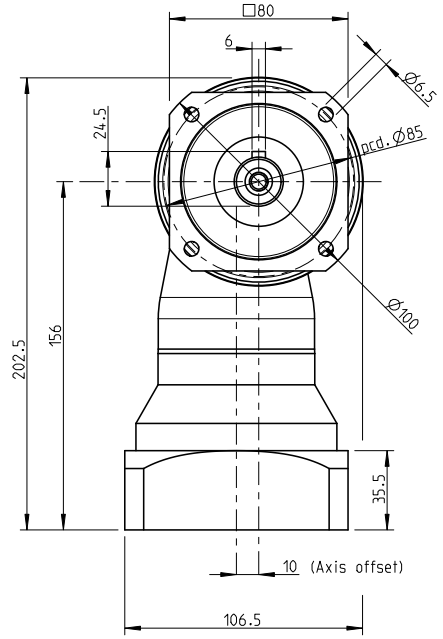

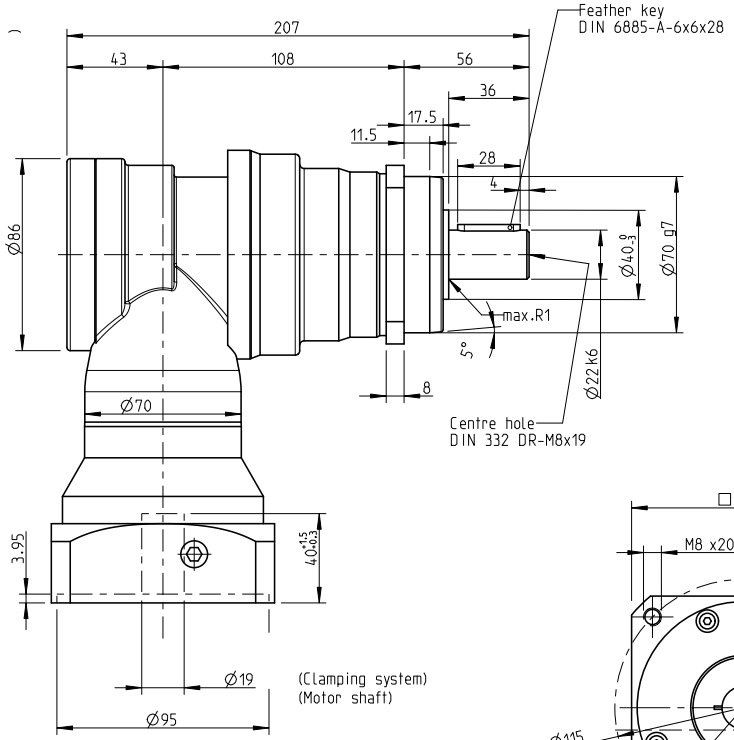

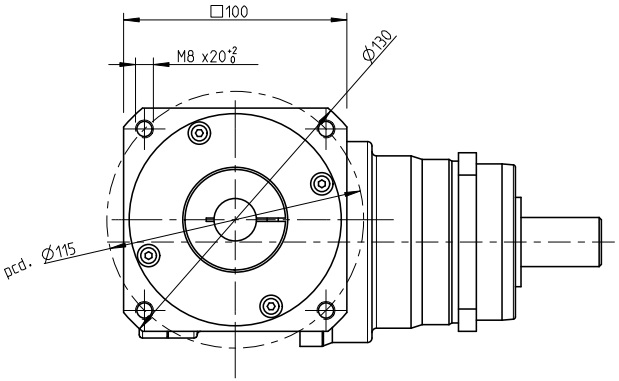

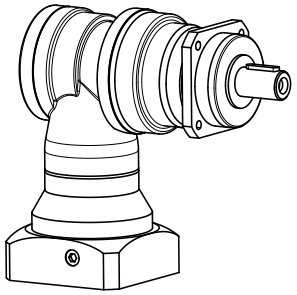

INDEX	ZMĚNA	DATUM	PODPIS		
ZM.MAT.			T.O.	HMOTNOST kg	MĚŘ.
ROZM.-POLOT.					
ROZM. ZAŘ.				ČSN	TŘ.Č.
VYPR.		NORM. REF.		POZN.	Č. KUSOVNÍKU
PŘEKR.					
TECHNOL.		SCHVÁLIL.		STARÝ V.	Č.V.

NÁZEV

Gearbox WSGN090

Listů List