Engineering data (WIN 1557)		
DC bus voltage	48	V DC
Nominal AC voltage	33	V AC (rms)
Rated voltage	27	V AC (rms)
Rated power	911	W
Rated speed	3000	rpm
Rated torque	2.90	Nm
Rated current	24.07	A (rms)
Peak torque	9.45	Nm
Peak current	103.5	A (rms)
Stall torque	3.25	Nm
Stall current	23.7	A (rms)
No load speed	3970	rpm
EMF constant ±10%	8.28	V AC (rms) / 1000rpm
Theoretical torque constant ±10%	0.137	Nm / A (rms)
Torque constant ±10% @ rated load	0.120	Nm / A (rms)
Number of poles	10	
Electrical time constant	2.89	ms
Winding terminal resistance	0.083	Ω
Rotary field terminal inductance	0.24	mH

Customs info	
HS Code	85015220

Mechanical data (setting 48)		
Max mechanical speed	12000	rpm
Mech. time constant	0.84	ms
Thermal time constant	34	min
Rotor inertia	1.1	kgcm²
Protection	IP65	
Color	EPOX2 (RAL 9005)	
Cooling	Convection	
Motor-only mass	3.5	kg

Sensors	
Temperature	PT1000 {PT1000}
Feedback	EDM35 (HDSL) multi-turn, 20+12 bits

Brake		
Braking torque	4.50	Nm
Voltage	24	V DC
Power @20°C	12.0	W
Current @20°C	0.50	A
Inertia	0.20	kgcm²
Mass	0.47	kg

Torque / speed curve

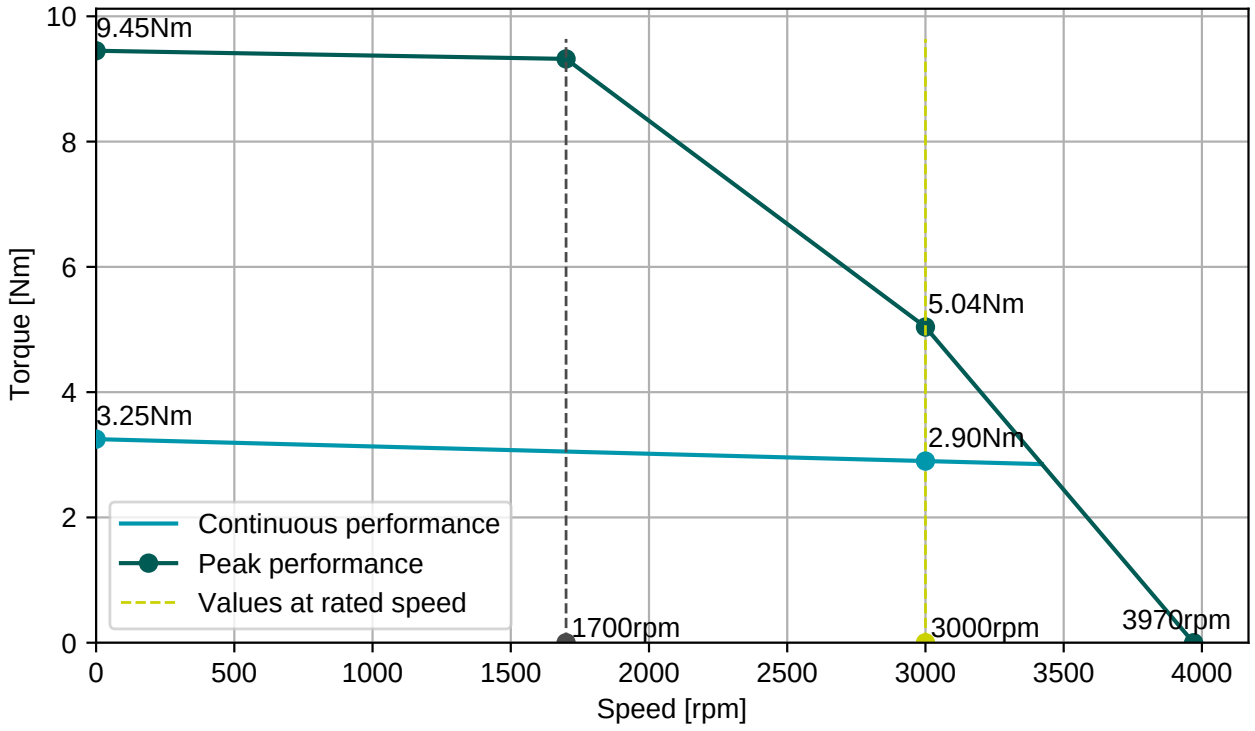

CA3102E24-11P-B-109

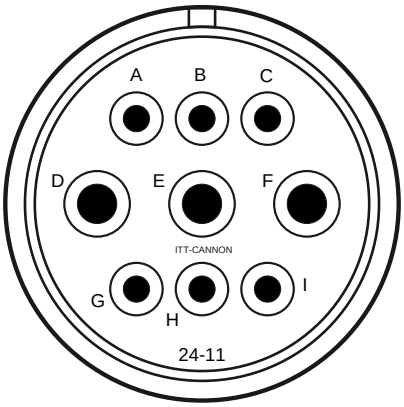

Connector 1 (410)	
D	U
E	V
F	W
A	PE
C	Brake+
B	Brake-
H	+Us/DSL+
I	GND/DSL-

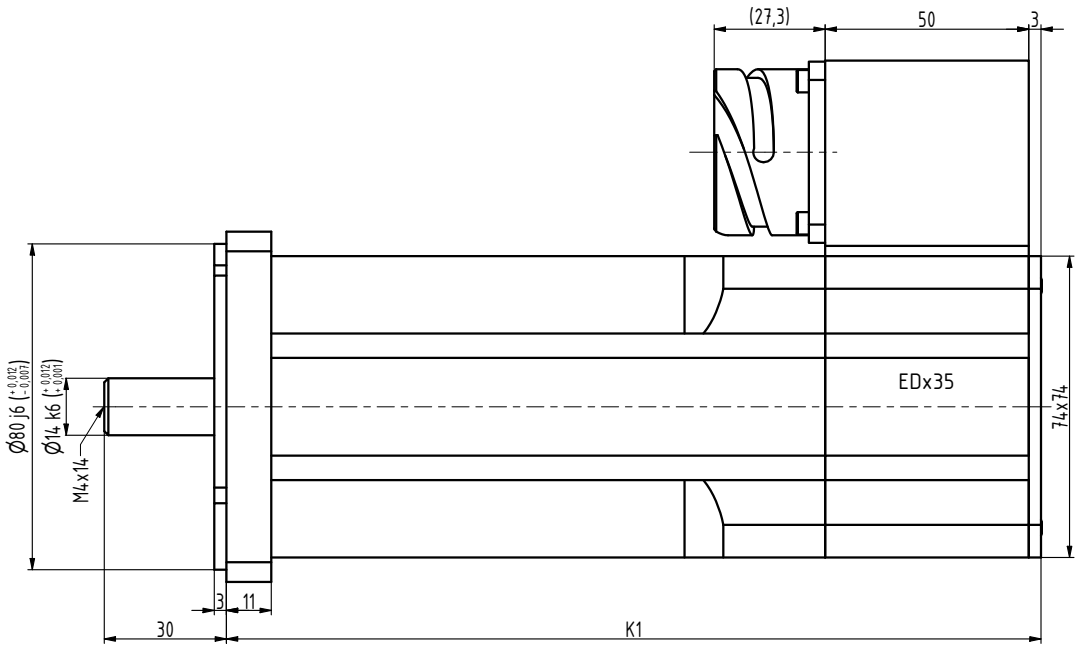

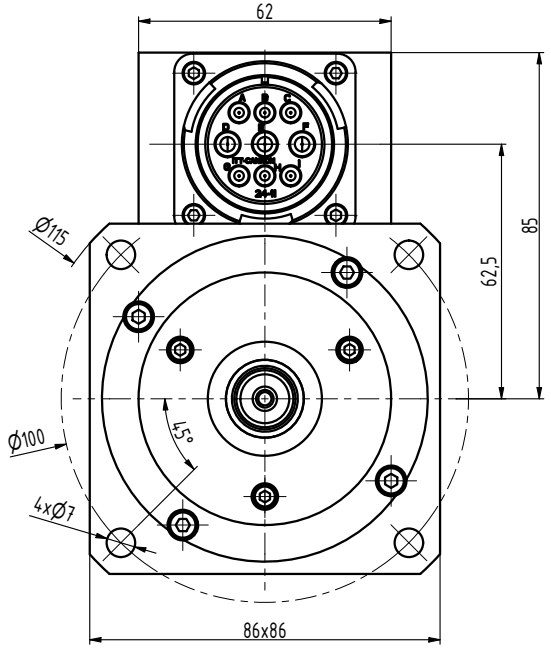

TYP	K1
M3-0160	200
M3-0270	236

				MATERIAL			
				PROJECTION		NAME	DATE
					DRAW	Ošlejšek	22.06.2026
				NON-TOLERANCED DIMENSIONS ISO 2768-mK	APPROVED	Ošlejšek	22.06.2026
					REDRAWN		
IND	CHANGE	DATE	NAME				
Motor M3		M3192 01 B Z				REVISION	SHEET 1/1