Engineering data (WIN 1162)		
DC bus voltage	48	V DC
Nominal AC voltage	33	V AC (rms)
Rated voltage	27	V AC (rms)
Rated power	565	W
Rated speed	3000	rpm
Rated torque	1.80	Nm
Rated current	15.9	A (rms)
Peak torque	6.15	Nm
Peak current	63.5	A (rms)
Stall torque	1.9	Nm
Stall current	14.5	A (rms)
No load speed	4150	rpm
EMF constant ±10%	7.91	V AC (rms) / 1000rpm
Theoretical torque constant ±10%	0.131	Nm / A (rms)
Torque constant ±10% @ rated load	0.113	Nm / A (rms)
Number of poles	10	
Electrical time constant	2.25	ms
Winding terminal resistance	0.187	Ω
Rotary field terminal inductance	0.42	mH

Customs info	
HS Code	85015100

Mechanical data (setting 48)		
Max mechanical speed	12000	rpm
Mech. time constant	1.04	ms
Thermal time constant	23	min
Rotor inertia	0.55	kgcm²
Protection	IP63	
Color	RAL 9005	
Cooling	Convection	

Sensors	
Temperature	PT1000 {PT1000}
Feedback	EDM35 (HDSL) multi-turn, 20+12 bits

Brake		
Braking torque	4.50	Nm
Voltage	24	V DC
Power @20°C	12.0	W
Current @20°C	0.50	A
Inertia	0.20	kgcm²
Mass	0.47	kg

Torque / speed curve

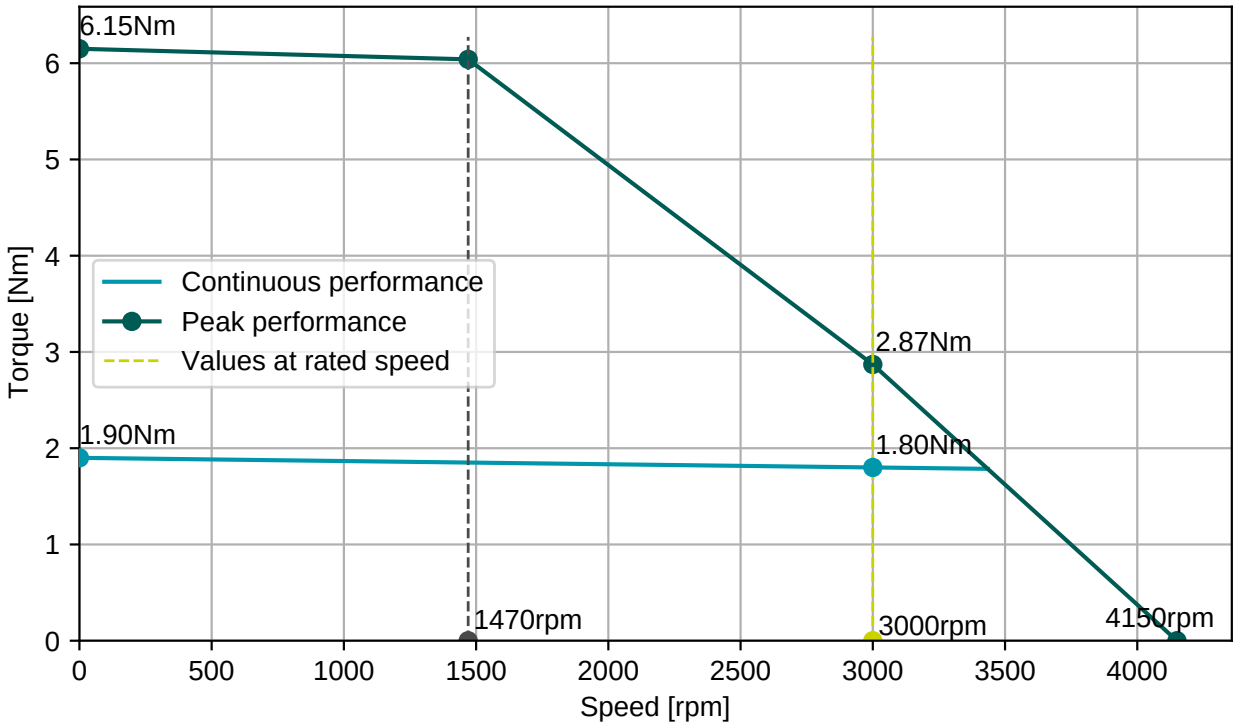

CA3102E24-11P-B-109

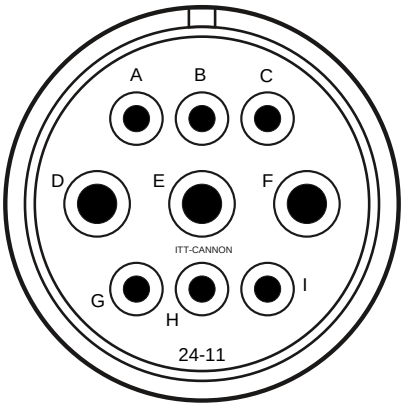

Connector 1 (410)	
D	U
E	V
F	W
A	PE
C	Brake+
B	Brake-
H	+Us/DSL+
I	GND/DSL-

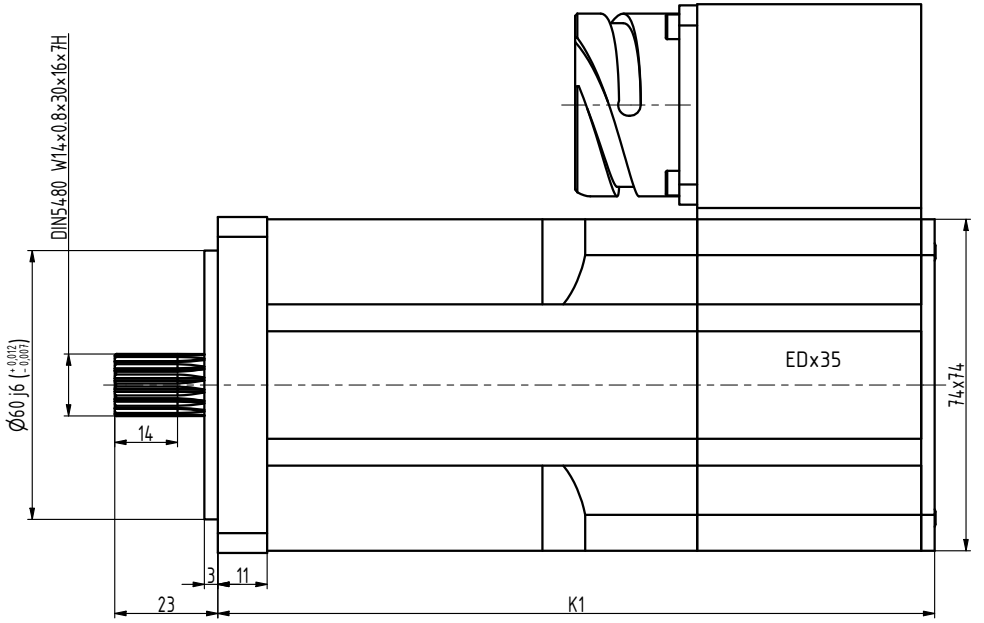

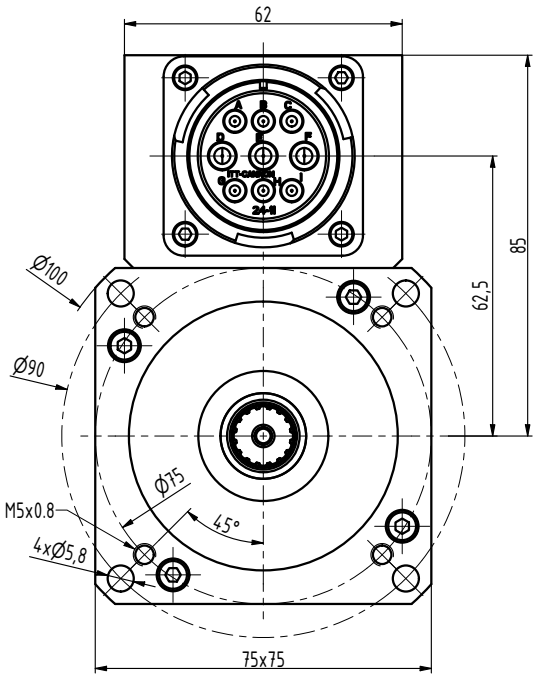

TYP	K1
N3-0115	142
N3-0205	160
N3-0350	196

INDEX	ZMĚNA	DATUM	PODPIS		
ZN.MAT.			T.O.	HMOTNOST kg	MĚŘ.
ROZM.-POLOT.					
POM. ZAŘ.				ČSN	TŘ.Č.
VYPR.		NORM.REF.		POZN.	Č. KUSOVNÍKU
PŘEKR.					
TECHNOL.		SCHVÁLIL	01.06.2026	STARÝ V.	Č.V.

NÁZEV
Motor N3

N3202 xx B Z

Listů List