Engineering motordata (WIN 771)		
DC bus voltage	560	V DC
Nominal AC voltage	380	V AC (rms)
Rated voltage	289	V AC (rms)
Rated power	2.3	kW
Rated speed	2000	rpm
Rated torque	11.20	Nm
Rated current	5.98	A (rms)
Peak torque	36	Nm
Peak current	20.9	A (rms)
Stall torque	12	Nm
Stall current	5.7	A (rms)
No load speed	2960	rpm
EMF constant ±10%	128	V AC (rms) / 1000rpm
Theoretical torque constant ±10%	2.12	Nm / A (rms)
Torque constant ±10% @ rated load	1.87	Nm / A (rms)
Number of poles	10	
Electrical time constant	8.05	ms
Winding terminal resistance	2.66	Ω
Rotary field terminal inductance	21.4	mH

Customs info	
HS Code	85015220

Mechanical motor data (setting 48)		
Max mechanical speed	9000	rpm
Mech. time constant	0.81	ms
Thermal time constant	45	min
Rotor inertia	7.9	kgcm²
Protection	IP64	
Color	RAL 9005	
Cooling	Convection	
Motor-only mass	11.2	kg
Max. axial force 20kh	145	N
Max. radial force 20kh*	761	N
Max. axial force 100kh	85	N
Max. radial force 100kh*	445	N

** Defined for point of action at ½ output shaft length*

Sensors	
Temperature	PT1000 {PT1000}
Feedback	EDM35 (HDSL) multi-turn, 20+12 bits

Gearbox engineering data		
Gear ratio	70	
Efficiency*	92	%
Torsional stiffness	160	Nm/arcmin
Number of stages	2	
Rated output torque	510	Nm
Cycling output torque	600	Nm
Max output torque	800	Nm
Emergency output torque	1390	Nm
Rated input speed	3500	rpm
Max input speed	8500	rpm
Operating temperature	<-25; 90>	°C
Max. backlash	< 1	arcmin
Service life	20000	h

** at rated speed & torque*

Lubrication	
Type	Standard
Lubricant	Castrol Optigear Synthetic 800/220

Gearbox mechanical data		
Max. radial force	12000	N
Max. axial force	7500	N
Output shaft design	Flange with dowel hole	
Mass	13.01	kg
Input inertia	1.163	kgcm²
Protection	IP65	

Actuator data		
Rated speed	29	rpm
Rated torque	510.00	Nm
Cycling torque	600.00	Nm
Peak torque	800.00	Nm
Emergency stop torque	1390.00	Nm
EMF constant ±10%	8960.0	V AC (rms) / 1000rpm
Torque constant ±10% @ rated load	120.62	Nm / A (rms)
Total mass	24.21	kg
Output inertia	44408.7	kgcm²

Torque / speed curve

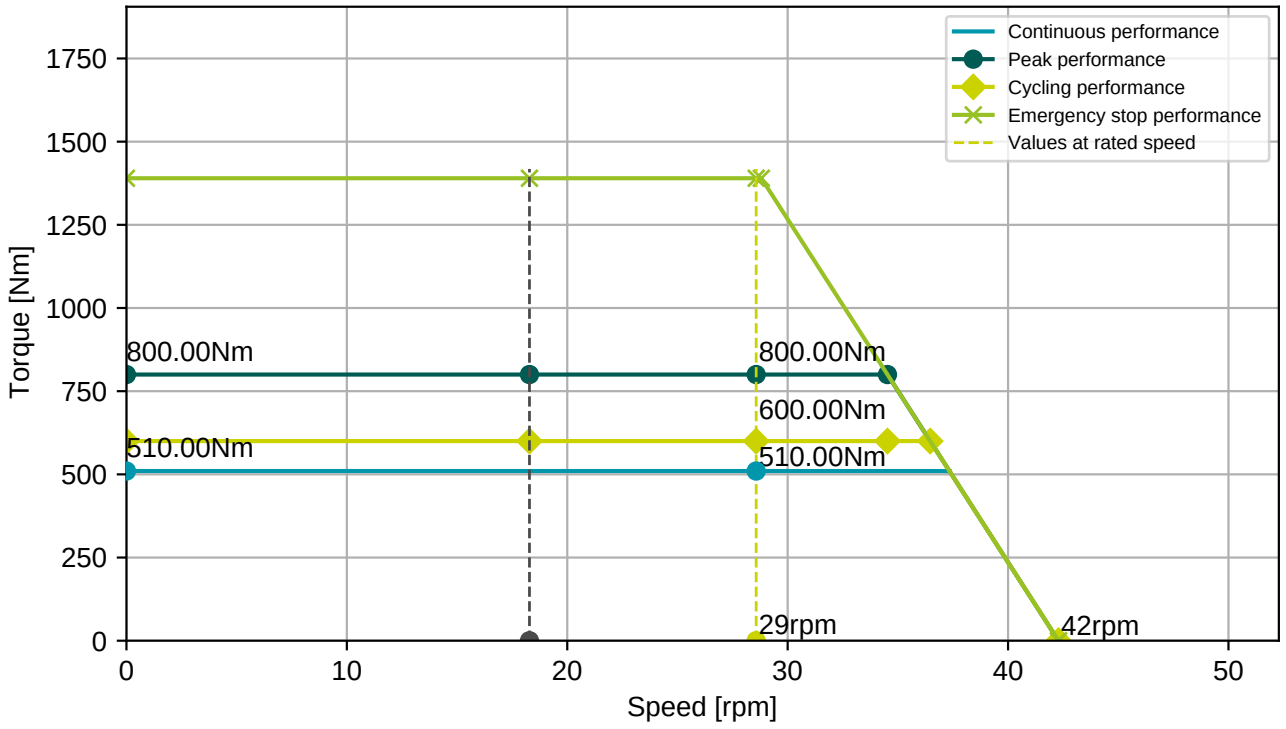

BGC110N00001216000

M23, 8 poles, rotary

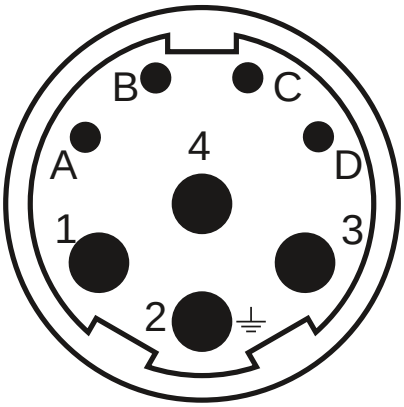

Connector 1 (283)	
1	U
4	V
3	W
2	PE
A	Brake+
B	Brake-
C	GND/DSL-
D	+Us/DSL+

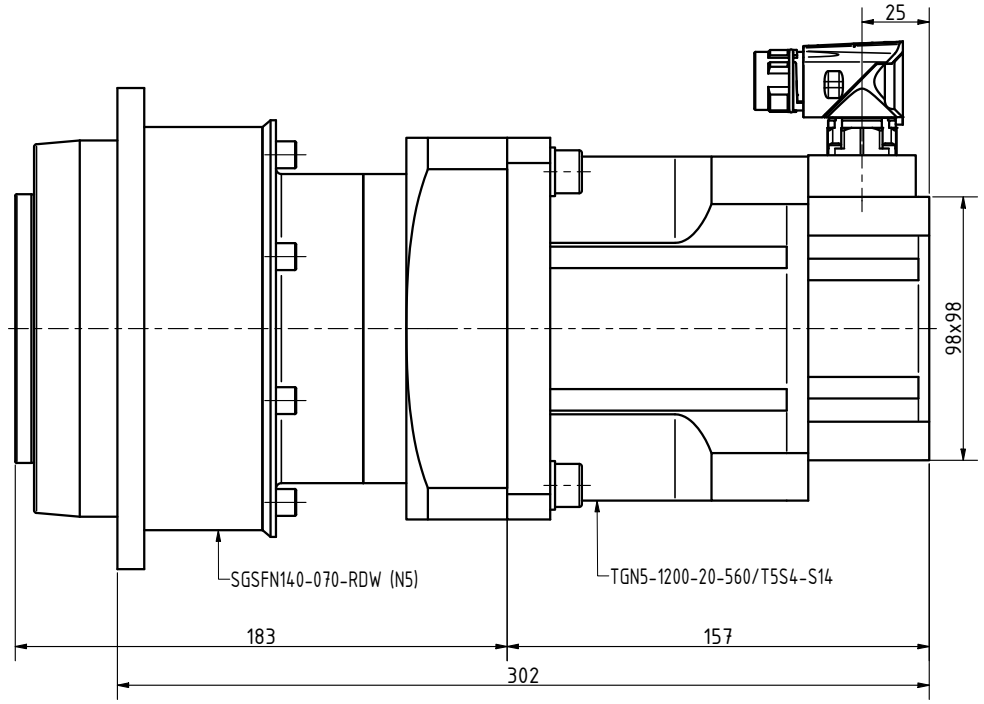

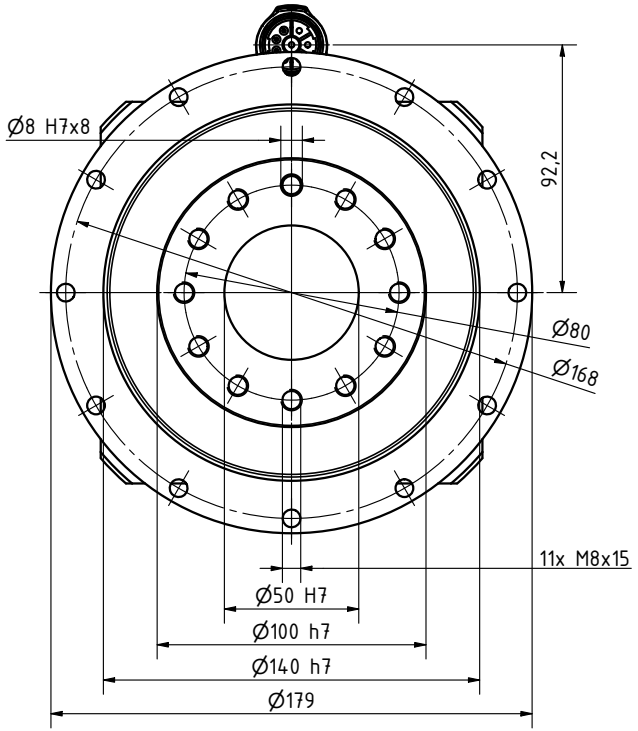

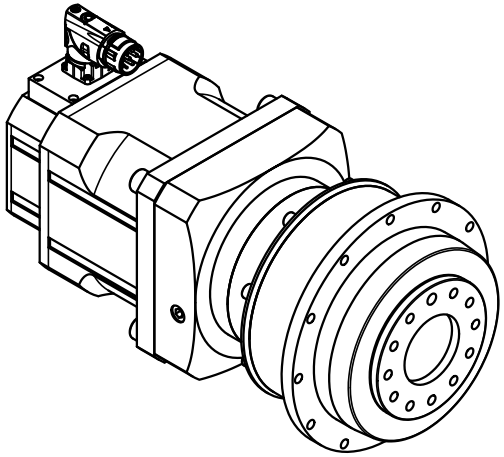

Bill of material			
Part Name	Quantity	Type	Tools
Screw - DIN 912/A4-70/M10x40	4	A4-70	imbus-M10
Washer - DIN 128A/A4 M10	4	A4	

Untolerated dimensions: ISO 2768 - m

Drawen:	Štěpán Bednář	Created: 19.05.2026	Modified:
Checked/approved by:		PROJECT NAME:	
Material			
Semiprod.		NUMBER - TITLE: SGSFN140-070-RDW (N5)	
Project ID's			

UNLESS OTHERWISE SPECIFIED DIMENSIONS ARE IN MM ANGLES ±XXX° or ±XXXX, 2 PL ±XXX, 3PL ±XXXX		SIZE A3	QUANTITY: / REVISION:
Designer: Bednar Mail: bednar@tgdrives.cz Tel: +420 724844770	Olomoucka 1290/79 627 00 Brno Czech republic	AUTODESK	SCALE: 3:5 / WEIGHT: / SHEET: 1/1

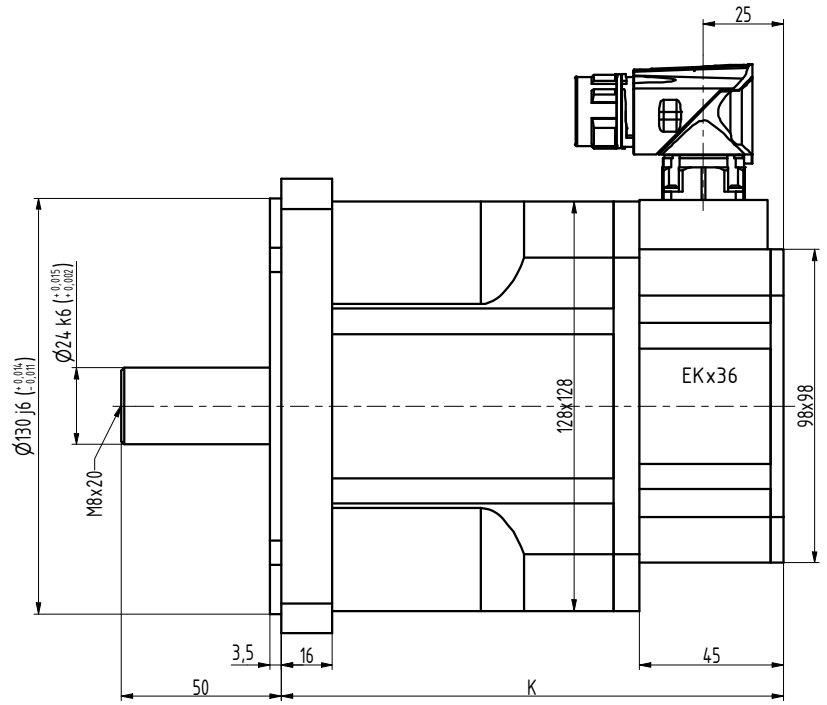

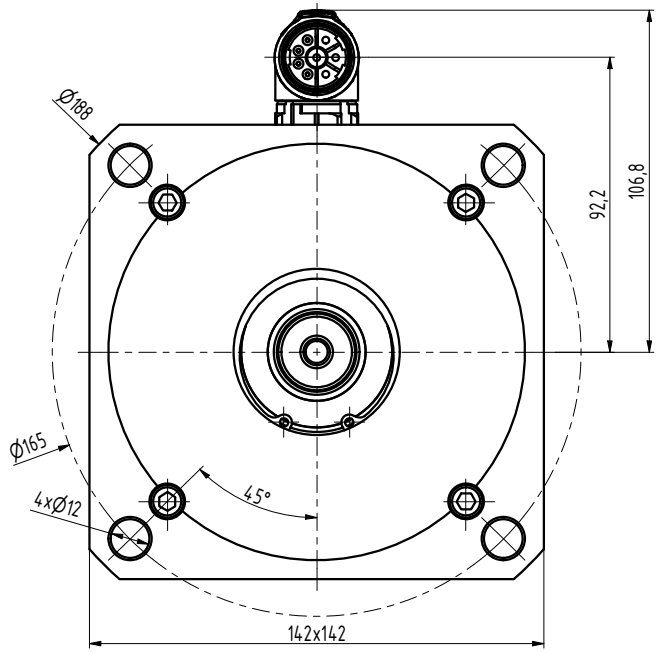

TYP	K
N5-0650	127
N5-1200	157
N5-1600	187
N5-2000	217
N5-2400	247

INDEX	ZMĚNA	DATUM	PODPIS

ZN.MAT.		T.O.	HMOTNOST kg	MĚŘ.
ROZM.-POLOT.				
POM. ZAŘ.			ČSN	TŘ.Č.
VYPR. Ošlejšek	NORM.REF.		POZN.	Č. KUSOVNÍKU
PŘEKR.				
TECHNOL.	SCHVÁLIL Ošlejšek	10.09.2021	STARÝ V.	Č.V.

NÁZEV

Motor N5

N5087 10 Z_S4_S1

Listů List

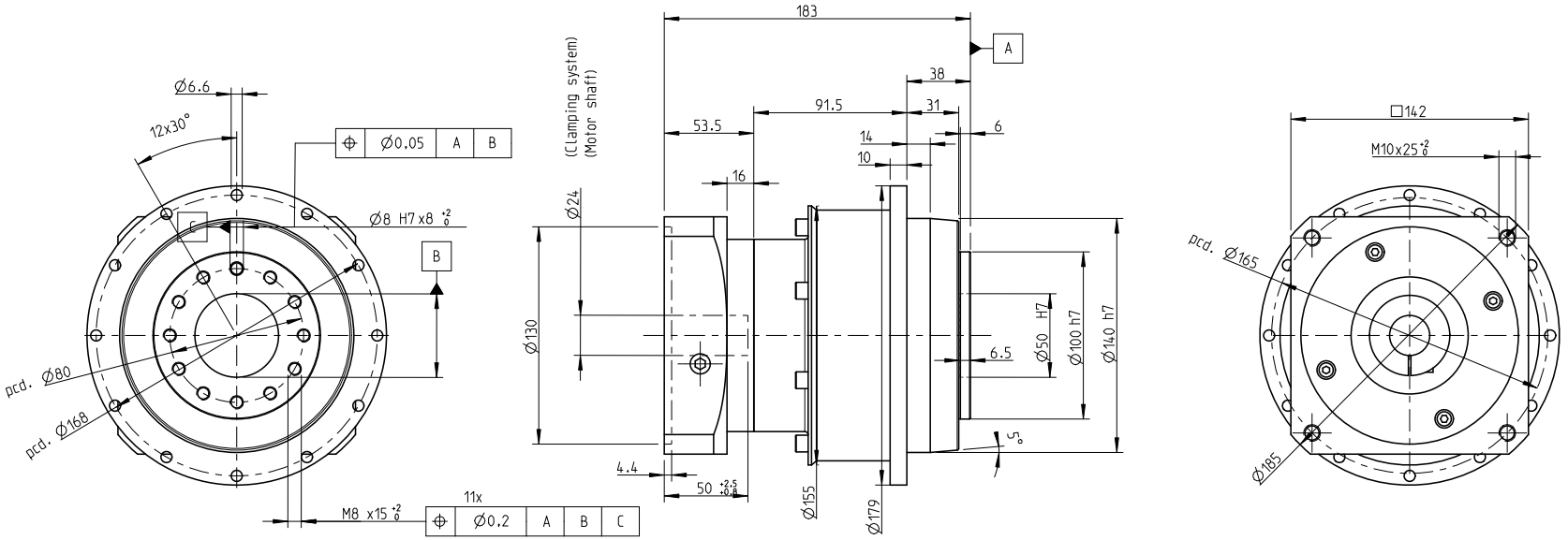

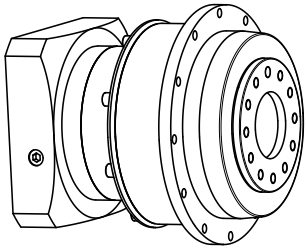

INDEX	ZMĚNA	DATUM	PODPIS	
ZM.MAT.		T.O.	HMOTNOST kg	MĚŘ.
ROZM.-POLOT.				
ROZM. ZAŘ.			ČSN	TŘ.Č.
VYPR.	NORM. REF.		POZN.	Č. KUSOVNÍKU
PŘEKR.				
TECHNOL.	SCHVÁLIL.	12.9.2020	STARÝ V.	Č.V.

NÁZEV

Gearbox SGSFN140

TGN5, TGT5, TGH5

Listů List