Engineering data (WIN 799)		
DC bus voltage	560	V DC
Nominal AC voltage	380	V AC (rms)
Rated voltage	255	V AC (rms)
Rated power	3.0	kW
Rated speed	6000	rpm
Rated torque	4.80	Nm
Rated current	8.76	A (rms)
Peak torque	22.5	Nm
Peak current	42.7	A (rms)
Stall torque	7.5	Nm
Stall current	10	A (rms)
No load speed	8330	rpm
EMF constant ±10%	45.5	V AC (rms) / 1000rpm
Theoretical torque constant ±10%	0.75	Nm / A (rms)
Torque constant ±10% @ rated load	0.55	Nm / A (rms)
Number of poles	10	
Electrical time constant	5.81	ms
Winding terminal resistance	0.63	Ω
Rotary field terminal inductance	3.66	mH

Customs info	
HS Code	85015220

Mechanical data (setting 5)		
Max mechanical speed	9000	rpm
Mech. time constant	0.63	ms
Thermal time constant	30	min
Rotor inertia	3.26	kgcm²
Protection	IP67	
Color	RAL 9005	
Cooling	Convection	
Motor-only mass	4.7	kg
Max. axial force 20kh	99	N
Max. radial force 20kh*	519	N
Max. axial force 100kh	58	N
Max. radial force 100kh*	303	N

** Defined for point of action at ½ output shaft length*

Sensors	
Temperature	PT1000 {PT1000}
Feedback	2-pole resolver (ER5Kd411, TS2620N21E11, RE-15-1-A15)

Torque / speed curve

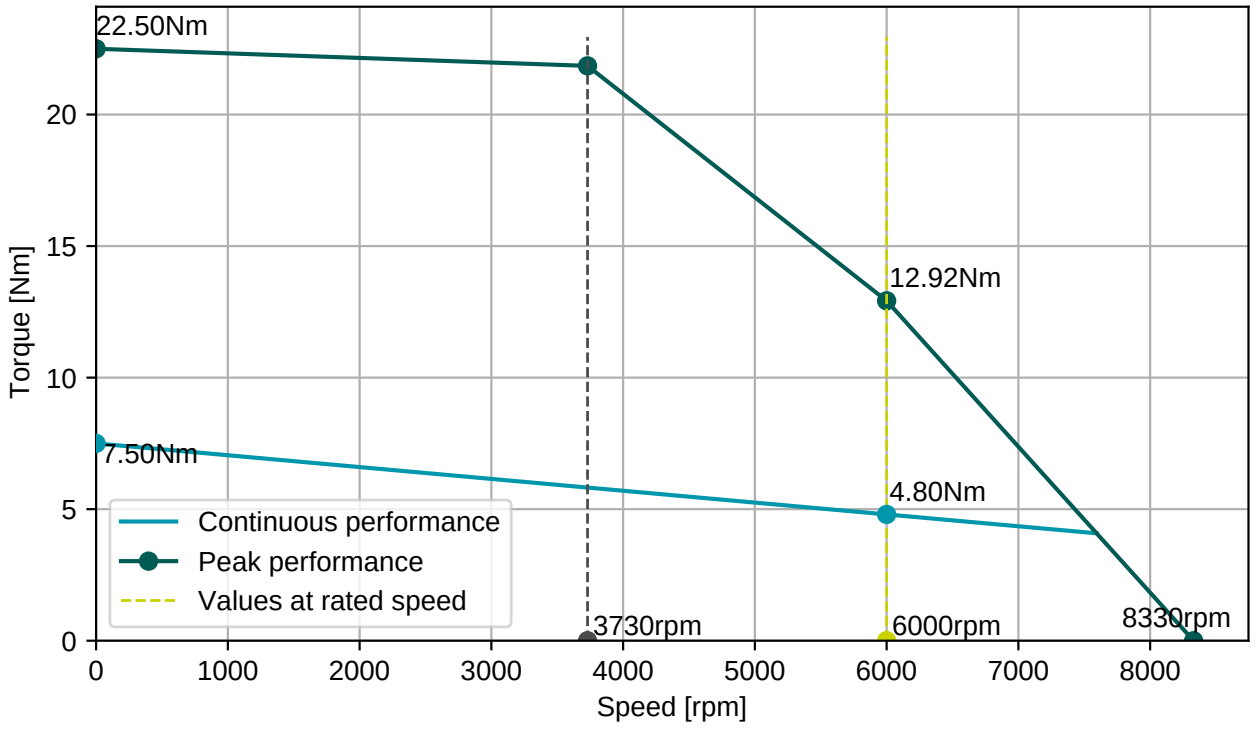

BGC110N00001216000
M23, 8 poles, rotary

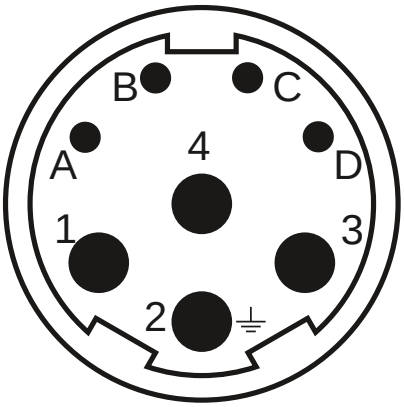

AGC052N00001215000
M23, 12 poles, rotary

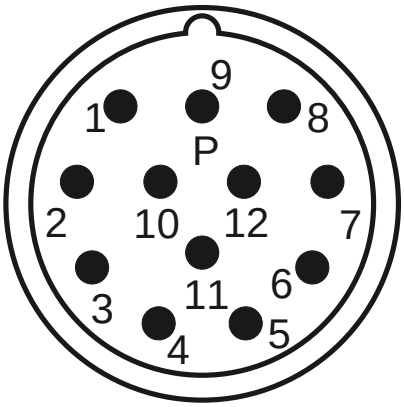

Connector 1 (9)	
1	U
4	V
3	W
2	PE
A	Brake+
B	Brake-
C	
D	

Connector 2 (10)	
2	Therm+
3	S4
4	S3
5	R2
6	Therm-
7	S2
8	S1
9	R1

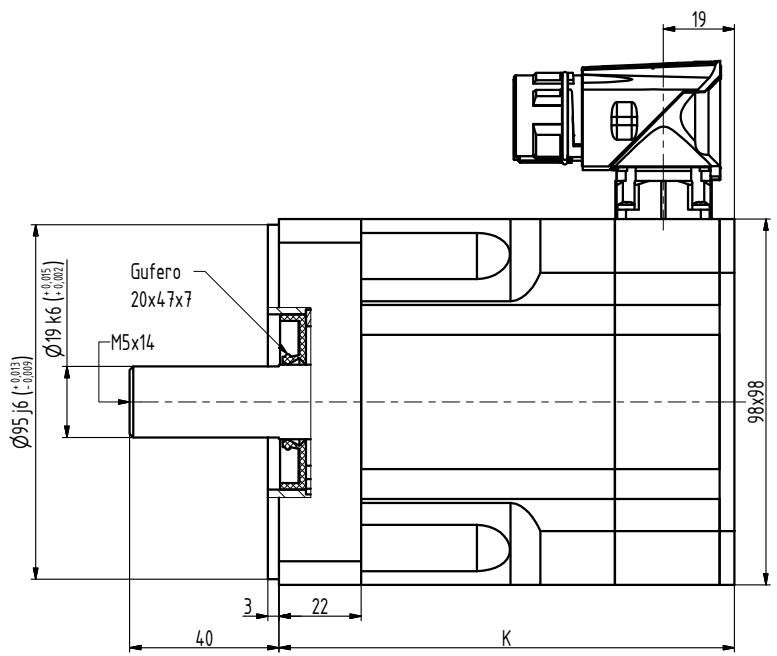

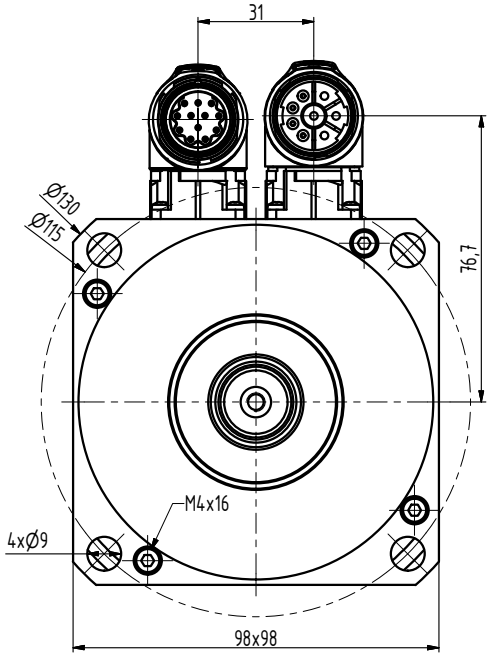

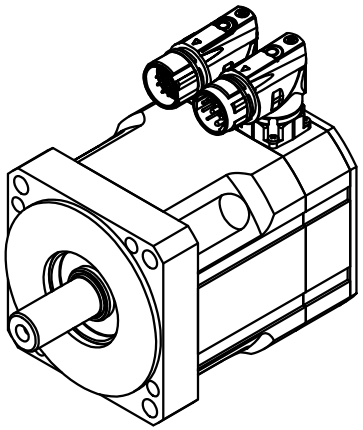

TYP	K
N4-0510	122
N4-0750	152
N4-0960	182
N4-1130	212

INDEX	ZMĚNA	DATUM	PODPIS

ZN.MAT.			T.O.	HMOTNOST kg	MĚŘ.
ROZM.-POLOT.					
POM. ZAŘ.				ČSN	TŘ.Č.
VYPR. Šimík	NORM.REF.			POZN.	Č. KUSOVNÍKU
PŘEKR.					
TECHNOL.	SCHVÁLIL Ošlejšek		13.3.2015	STARÝ V.	Č.V.

NÁZEV

Motor N4

N4112 00 Z

Listů List