Engineering data (WIN -100035)		
DC bus voltage	560	V DC
Nominal AC voltage	330	V AC (rms)
Rated voltage	256	V AC (rms)
Rated power	3.8	kW
Rated speed	9000	rpm
Rated torque	4.00	Nm
Rated current	10.15	A (rms)
Peak torque	21.2	Nm
Peak current	73.95	A (rms)
Stall torque	5.3	Nm
Stall current	12.32	A (rms)
No load speed	12660	rpm
EMF constant ±10%	26	V AC (rms) / 1000rpm
Theoretical torque constant ±10%	0.43	Nm / A (rms)
Torque constant ±10% @ rated load	0.39	Nm / A (rms)
Number of poles	6	
Electrical time constant	5.61	ms
Winding terminal resistance	0.54	Ω
Rotary field terminal inductance	3.03	mH

Customs info	
HS Code	85015220

Mechanical data (setting 29)		
Max mechanical speed	12000	rpm
Mech. time constant	1.34	ms
Thermal time constant	64	min
Rotor inertia	2.65	kgcm²
Protection	IP64	
Color	RAL 9005	
Cooling	Ventilation 230V/50Hz	

Sensors	
Temperature	PT1000 {PT1000}
Feedback	ECI1119 (EnDat 2.2) single-turn, 19 bits

Torque / speed curve

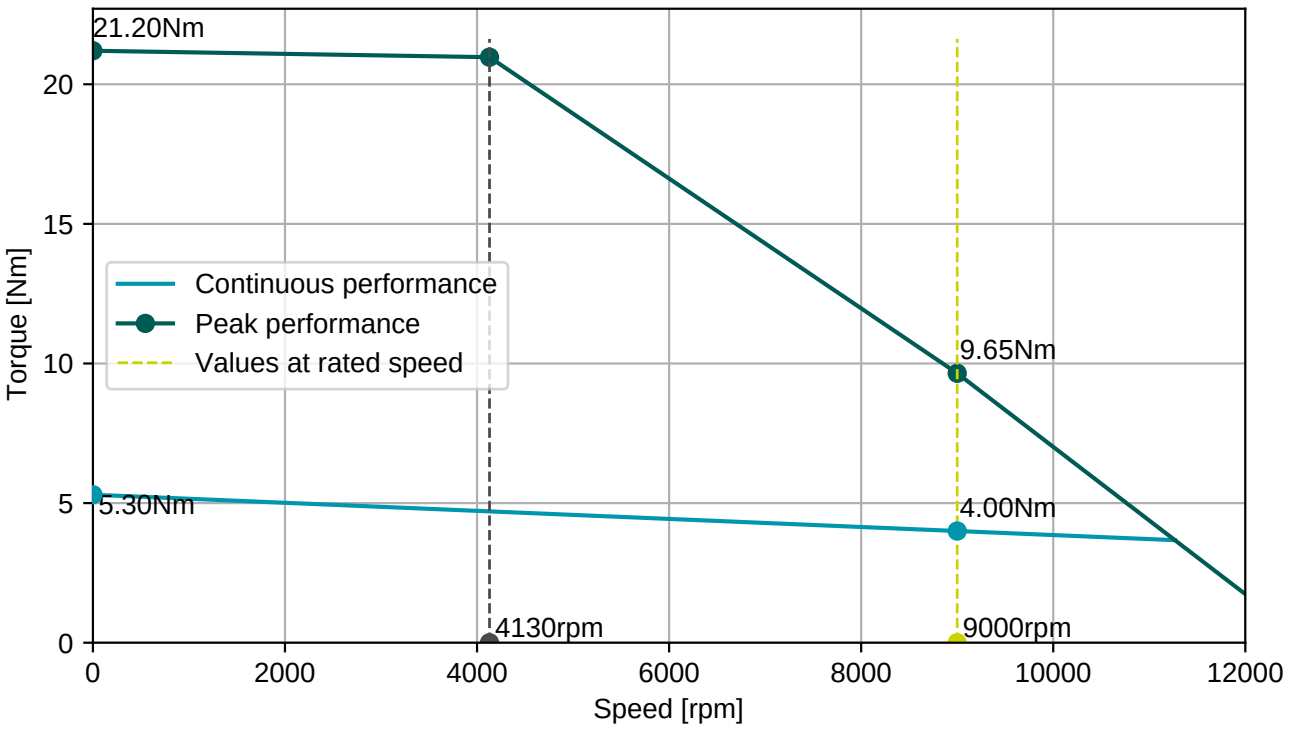

BGC110N00001216000
M23, 8 poles, rotary

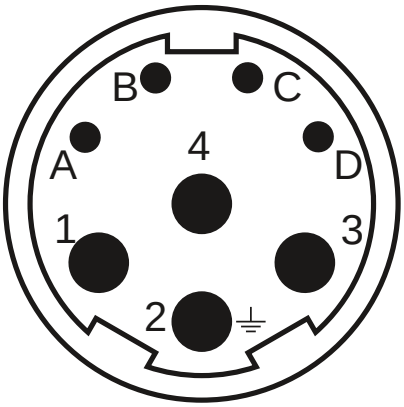

AGC052N00001215000
M23, 12 poles, rotary

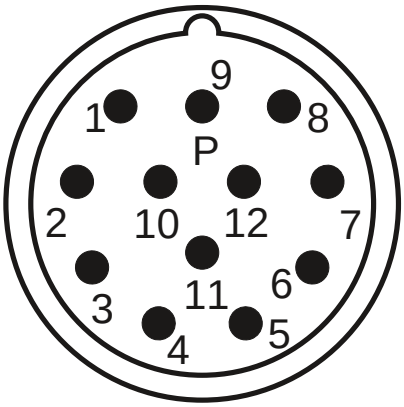

Connector 1 (1)	
1	U
4	V
3	W
2	PE
A	Therm+
B	Therm-
C	Brake+
D	Brake-

Connector 2 (474)	
1	Vcc (+5V)
2	GND
3	DATA
4	DATA-
5	CLOCK
6	CLOCK-
7	Therm+
8	Therm-
9	Vcc sensor
10	GND sensor
11	PT1000+
12	PT1000-

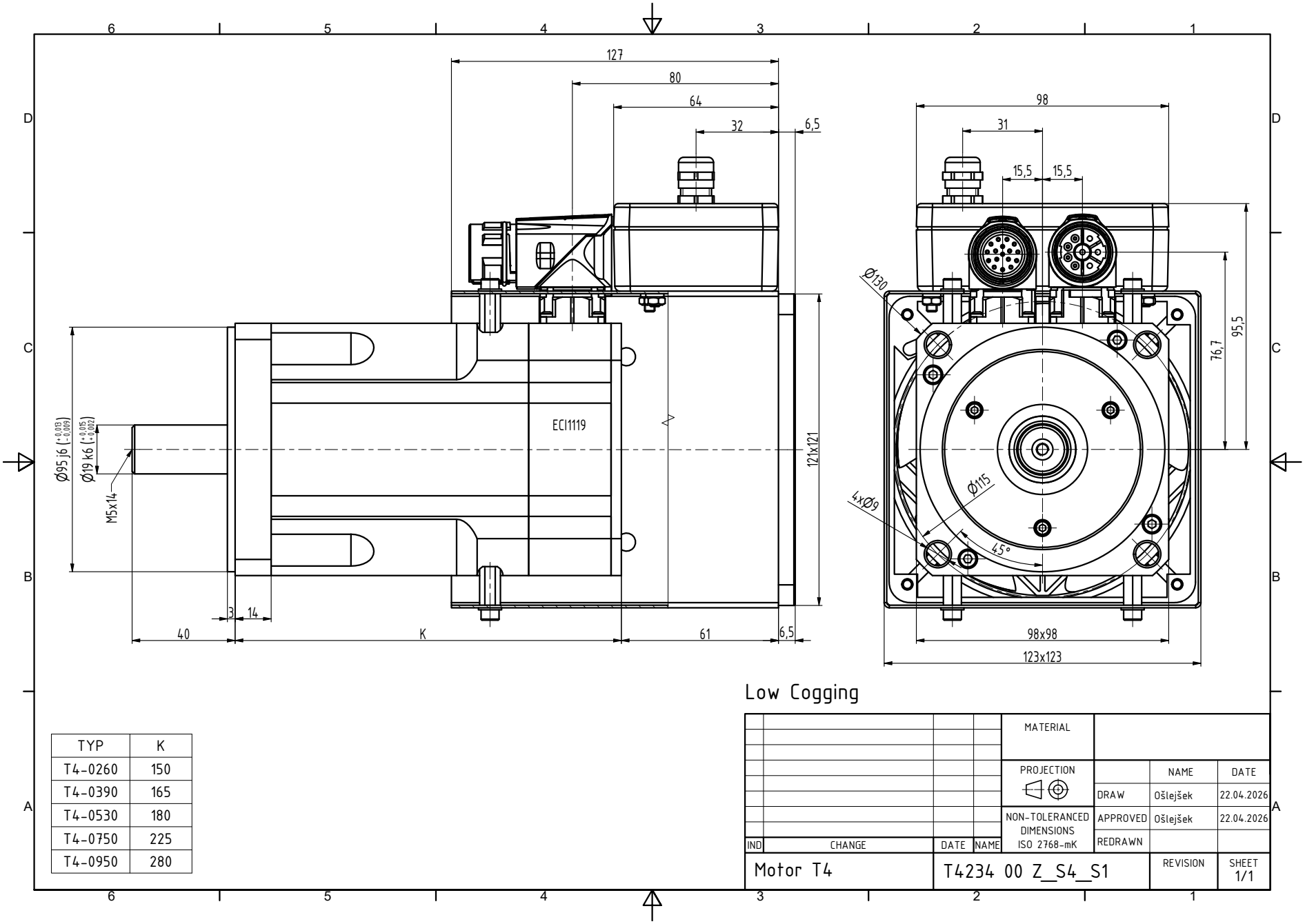

Low Cogging

TYP	K
T4-0260	150
T4-0390	165
T4-0530	180
T4-0750	225
T4-0950	280

IND	CHANGE	DATE	NAME

MATERIAL

PROJECTION

NON-TOLERANCED DIMENSIONS ISO 2768-mK

	NAME	DATE
DRAW	Ošlejšek	22.04.2026
APPROVED	Ošlejšek	22.04.2026
REDRAWN		

Motor T4

T4234 00 Z_S4_S1

REVISION

SHEET 1/1