Engineering data (WIN 1576)		
DC bus voltage	24	V DC
Nominal AC voltage	17	V AC (rms)
Rated voltage	16	V AC (rms)
Rated power	291	W
Rated speed	1500	rpm
Rated torque	1.85	Nm
Rated current	15.83	A (rms)
Peak torque	5.7	Nm
Peak current	56.9	A (rms)
Stall torque	1.9	Nm
Stall current	14.5	A (rms)
No load speed	2120	rpm
EMF constant ±10%	7.91	V AC (rms) / 1000rpm
Theoretical torque constant ±10%	0.131	Nm / A (rms)
Torque constant ±10% @ rated load	0.117	Nm / A (rms)
Number of poles	10	
Electrical time constant	2.25	ms
Winding terminal resistance	0.187	Ω
Rotary field terminal inductance	0.42	mH

Certifications & customs info	
HS Code	85015100
ATEX certification	II 3GD Ex nAc IIC 155°C Ex tc IIIC T155°C

Mechanical data (setting 5)		
Max mechanical speed	12000	rpm
Mech. time constant	1.04	ms
Thermal time constant	23	min
Rotor inertia	0.55	kgcm²
Protection	IP65	
Color	RAL 9005	
Cooling	Convection	

Sensors	
Temperature	PT1000 {PT1000}
Feedback	2-pole resolver (ER5Kd411, TS2620N21E11, RE-15-1-A15)

Torque / speed curve

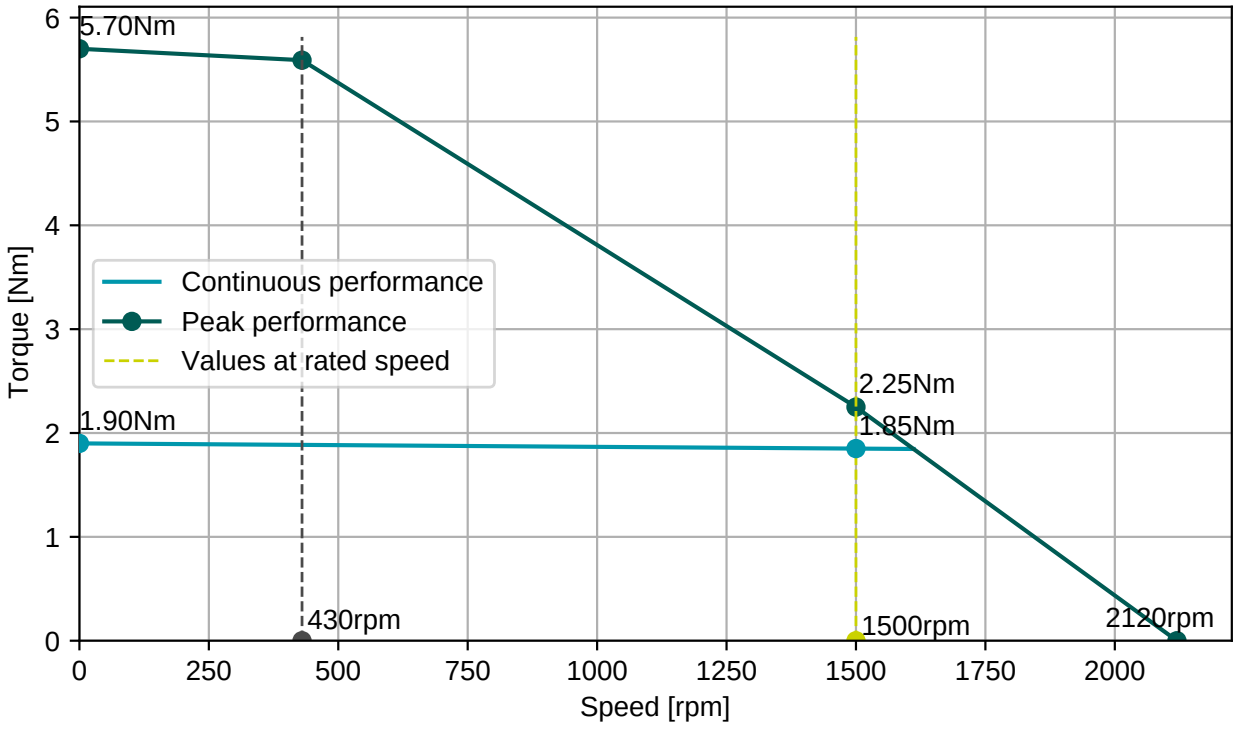

Cable DSL4x2,5 (2x0,25), D=11,7±0,4mm

Connector 1 (21)	
1	U
2	V
3	W
PE	PE
5	Brake+
6	Brake-

Numbers printed on the cables

Cable R4x2x0,25, D=6,8±0,4mm

Connector 2 (22)	
white	R1
brown	R2
grey	S1
green	S2
pink	S3
yellow	S4
red	Therm+
blue	Therm-

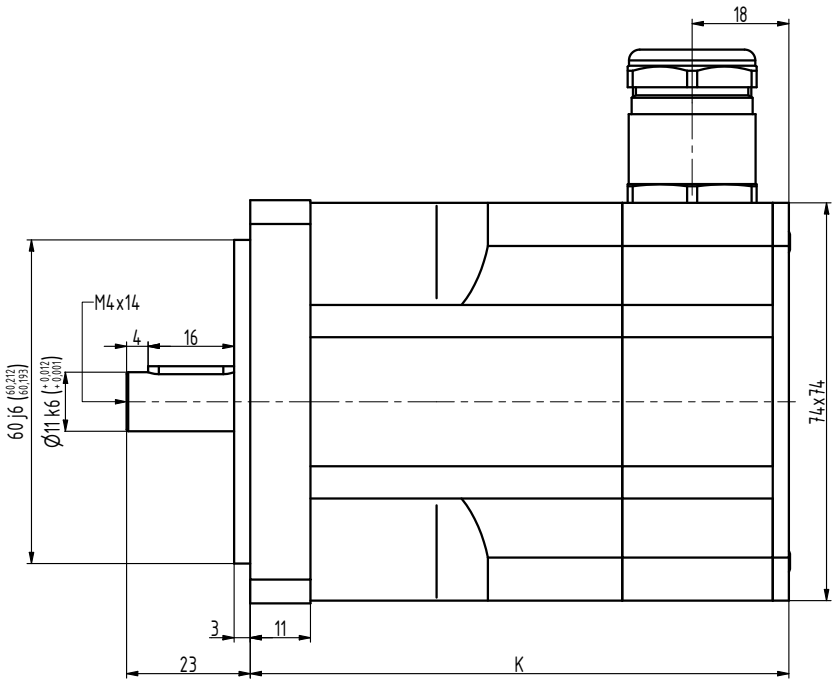

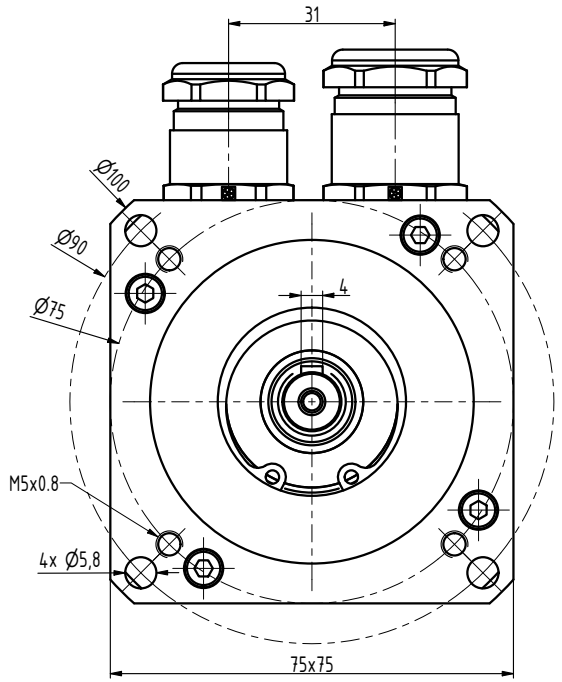

TYP	K
N3-0115	82
N3-0205	100
N3-0350	136

INDEX	ZMĚNA	DATUM	PODPIS		
ZN.MAT.			T.O.	HMOTNOST kg	MĚŘ.
ROZM.-POLOT.					
POM. ZAŘ.				ČSN	TŘ.Č.
VYPR.		NORM.REF.		POZN.	Č. KUSOVNÍKU
PŘEKR.					
TECHNOL.		SCHVÁLIL	21.04.2026	STARÝ V.	Č.V.

NÁZEV
Motor N3

N3111 xx P Z

Listů List