Engineering data (WIN 1502)		
DC bus voltage	48	V DC
Nominal AC voltage	33	V AC (rms)
Rated voltage	24	V AC (rms)
Rated power	597	W
Rated speed	3000	rpm
Rated torque	1.90	Nm
Rated current	18.25	A (rms)
Peak torque	10.5	Nm
Peak current	104.3	A (rms)
Stall torque	2.2	Nm
Stall current	18.2	A (rms)
No load speed	4480	rpm
EMF constant ±10%	7.32	V AC (rms) / 1000rpm
Theoretical torque constant ±10%	0.121	Nm / A (rms)
Torque constant ±10% @ rated load	0.104	Nm / A (rms)
Number of poles	10	
Electrical time constant	1.18	ms
Winding terminal resistance	0.144	Ω
Rotary field terminal inductance	0.17	mH

Customs info	
HS Code	85015100

Mechanical data (setting 48)		
Max mechanical speed	12000	rpm
Mech. time constant	1.77	ms
Thermal time constant	27	min
Rotor inertia	1.04	kgcm²
Protection	IP64	
Color	RAL 9005	
Cooling	Convection	
Cable length	1	m
Motor-only mass	2	kg
Max. axial force 20kh	75	N
Max. radial force 20kh*	394	N
Max. axial force 100kh	44	N
Max. radial force 100kh*	231	N

** Defined for point of action at ½ output shaft length*

Sensors	
Temperature	PT1000 {PT1000}
Feedback	EES37 (HDSL) single-turn, 17 bits

Brake		
Braking torque	4.50	Nm
Voltage	24	V DC
Power @20°C	12.0	W
Current @20°C	0.50	A
Inertia	0.20	kgcm²
Mass	0.47	kg

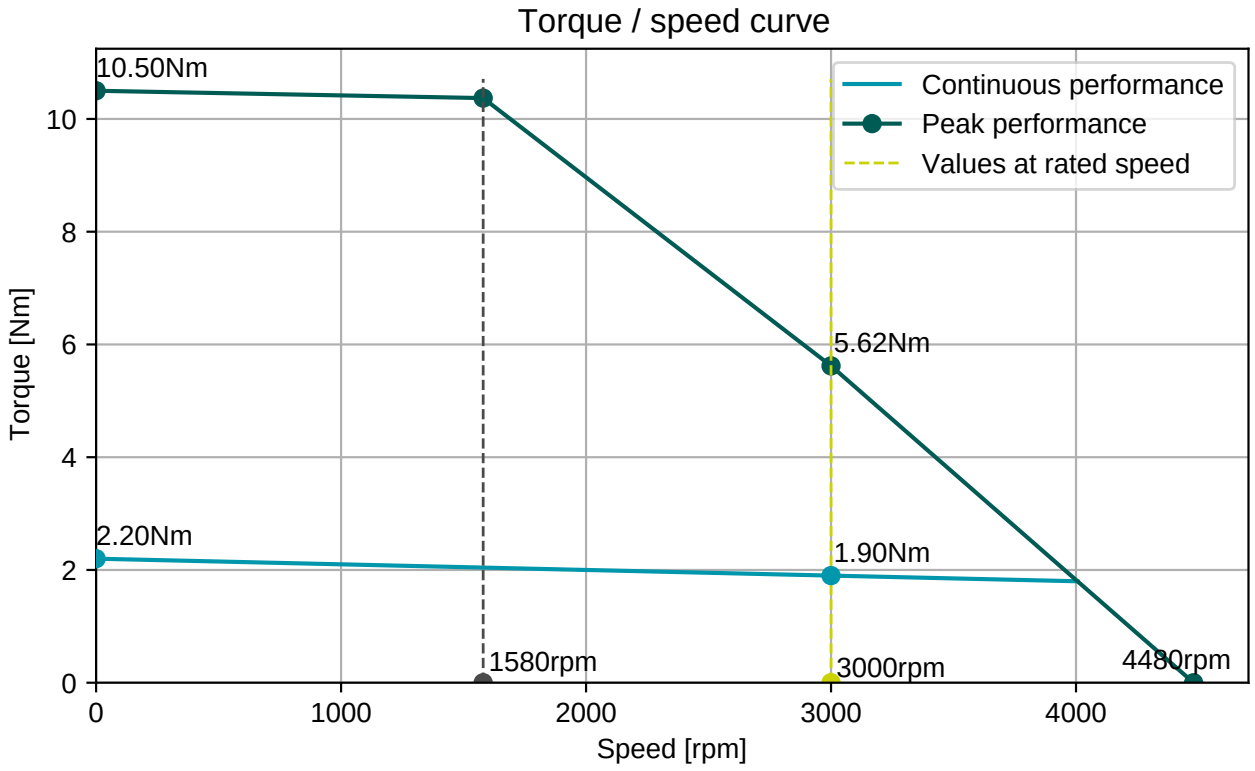

Cable DSL4x2,5 (2x0,25)+(2x1),
D=13,5±0,4mm

Connector 1 (306)	
1	U
2	V
3	W
PE	PE
5	Brake+
6	Brake-
brown	+Us/DSL+
white	GND/DSL-

Numbers printed on the cables

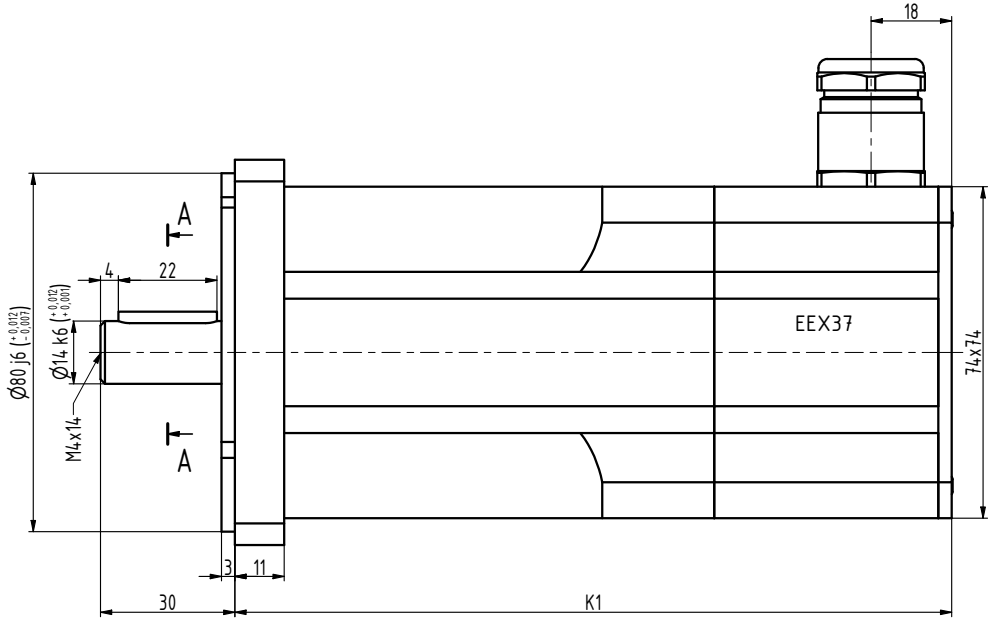

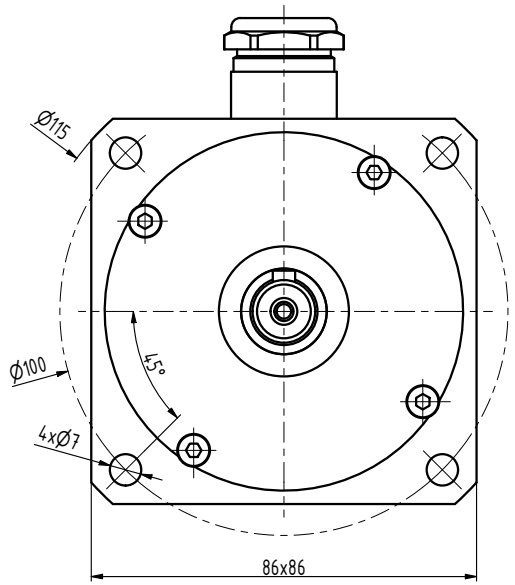

A-A (2 : 1)
ČSN 02 2562

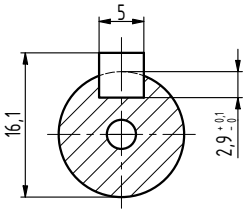

TYP	K1
N3-0115	142
N3-0205	160
N3-0280	178
N3-0350	196
N3-0420	214
N3-0480	232

INDEX	ZMĚNA	DATUM	PODPIS		
ZN.MAT.			T.O.	HMOTNOST kg	MĚŘ.
ROZM.-POLOT.					
POM. ZAŘ.				ČSN	TŘ.Č.
VYPR. Ošlejšek		NORM.REF.		POZN.	Č. KUSOVNÍKU
PŘEKR.					
TECHNOL.		SCHVÁLIL Ošlejšek	20.11.2020	STARÝ V.	Č.V.

NÁZEV
Motor N3

N3133 05 BP Z

Listů List