Engineering data (WIN 843)		
DC bus voltage	560	V DC
Nominal AC voltage	380	V AC (rms)
Rated voltage	318	V AC (rms)
Rated power	518	W
Rated speed	1500	rpm
Rated torque	3.30	Nm
Rated current	1.25	A (rms)
Peak torque	10.5	Nm
Peak current	4.3	A (rms)
Stall torque	3.5	Nm
Stall current	1.2	A (rms)
No load speed	2140	rpm
EMF constant ±10%	177	V AC (rms) / 1000rpm
Theoretical torque constant ±10%	2.93	Nm / A (rms)
Torque constant ±10% @ rated load	2.64	Nm / A (rms)
Number of poles	10	
Electrical time constant	2.85	ms
Winding terminal resistance	35.38	Ω
Rotary field terminal inductance	100.9	mH

Customs info	
HS Code	85015100

Mechanical data (setting 31)		
Max mechanical speed	12000	rpm
Mech. time constant	0.74	ms
Thermal time constant	27	min
Rotor inertia	1.04	kgcm²
Protection	IP64	
Color	RAL 9005	
Cooling	Convection	
Max. axial force 20kh	94	N
Max. radial force 20kh*	495	N
Max. axial force 100kh	55	N
Max. radial force 100kh*	290	N

** Defined for point of action at ½ output shaft length*

Sensors	
Temperature	PT1000 {PT1000}
Feedback	2-pole resolver (ER5Kd411, TS2620N21E11, RE-15-1-A15)

Torque / speed curve

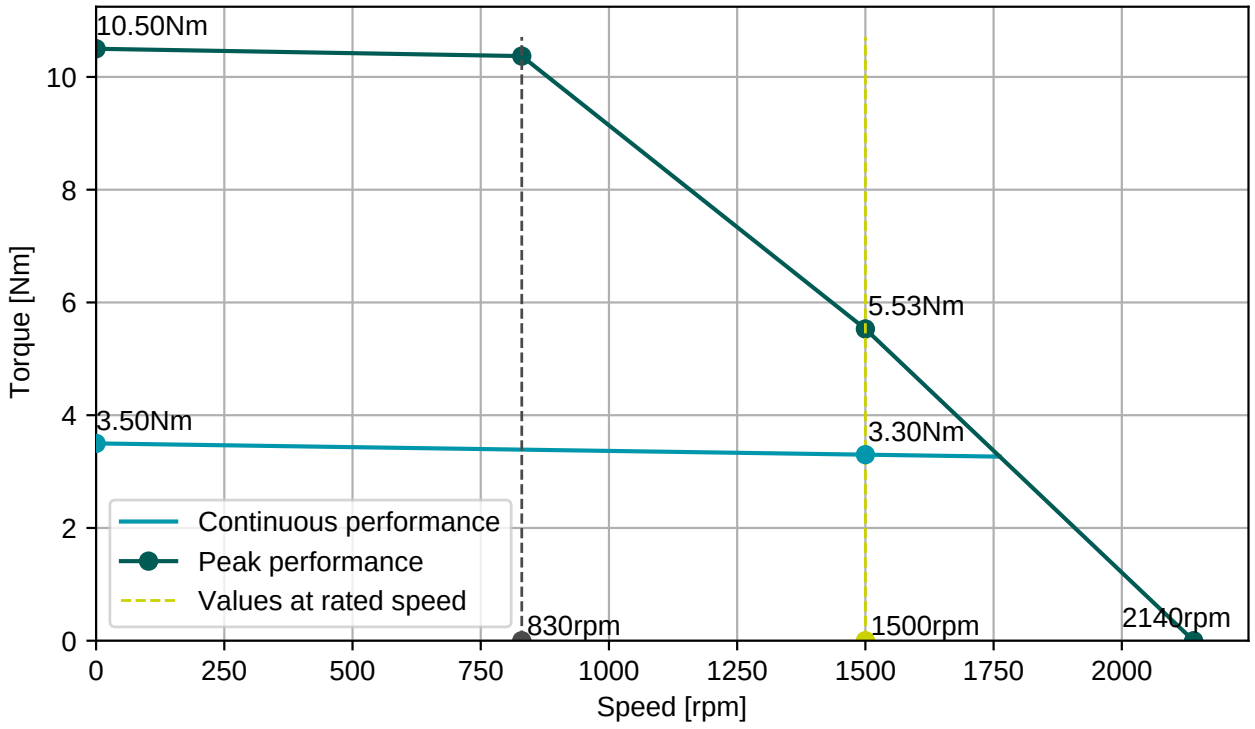

BGC110N00001216000
M23, 8 poles, rotary

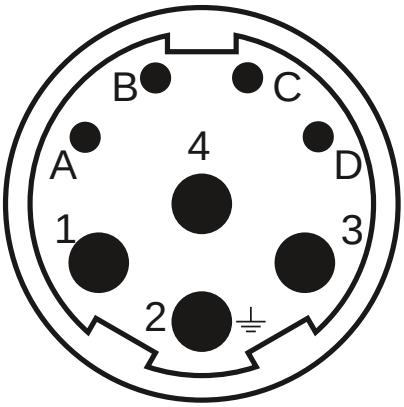

AGC052N00001215000
M23, 12 poles, rotary

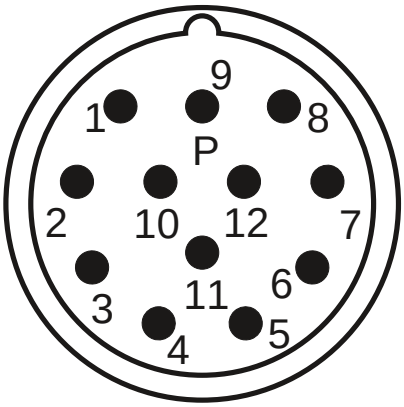

Connector 1 (1)	
1	U
4	V
3	W
2	PE
A	Therm+
B	Therm-
C	Brake+
D	Brake-

Connector 2 (2)	
4	S1
8	S3
3	S4
7	S2
5	R2
9	R1

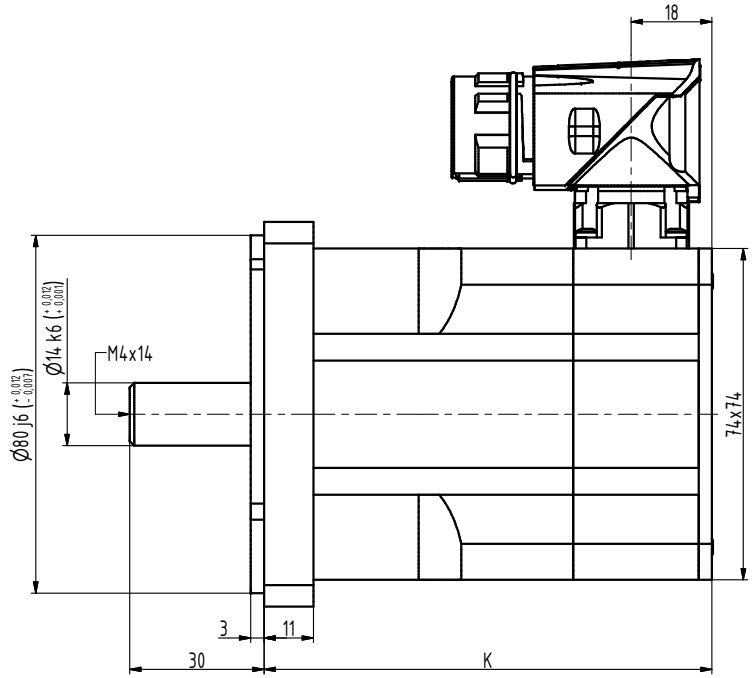

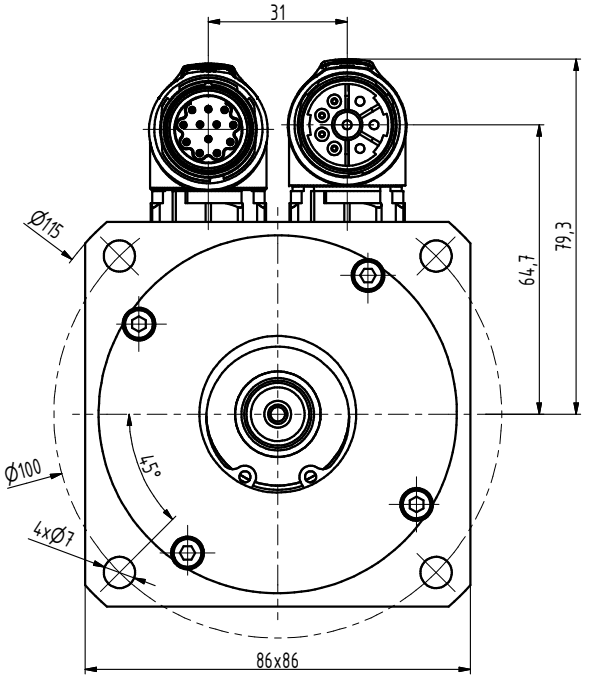

TYP	K
N3-0115	82
N3-0205	100
N3-0280	118
N3-0350	136
N3-0420	154
N3-0480	172

INDEX	ZMĚNA	DATUM	PODPIS

ZN.MAT.		T.O.	HMOTNOST kg	MĚŘ.
ROZM.-POLOT.				
POM. ZAŘ.			ČSN	TŘ.Č.
VYPR. Ošlejšek	NORM.REF.		POZN.	Č. KUSOVNÍKU
PŘEKR. Ošlejšek 4.11.2020				
TECHNOL.	SCHVÁLIL Ošlejšek	18.10.2009	STARÝ V.	Č.V.

NÁZEV
Motor N3

N3111 00 Z_S4_S1

Listů List