Engineering data (WIN 1062)		
DC bus voltage	560	V DC
Nominal AC voltage	380	V AC (rms)
Rated voltage	301	V AC (rms)
Rated power	3.3	kW
Rated speed	1500	rpm
Rated torque	21.00	Nm
Rated current	7.13	A (rms)
Peak torque	63	Nm
Peak current	27.1	A (rms)
Stall torque	23	Nm
Stall current	7.6	A (rms)
No load speed	2070	rpm
EMF constant ±10%	183	V AC (rms) / 1000rpm
Theoretical torque constant ±10%	3.03	Nm / A (rms)
Torque constant ±10% @ rated load	2.95	Nm / A (rms)
Number of poles	10	
Electrical time constant	9.05	ms
Winding terminal resistance	1.69	Ω
Rotary field terminal inductance	15.3	mH

Customs info	
HS Code	85015220

Mechanical data (setting 31)		
Max mechanical speed	9000	rpm
Mech. time constant	0.63	ms
Thermal time constant	70	min
Rotor inertia	19.7	kgcm²
Protection	IP64	
Color	RAL 9005	
Cooling	Convection	
Motor-only mass	11.2	kg

Sensors	
Temperature	PT1000 {PT1000}
Feedback	2-pole resolver (66XFW975)

Torque / speed curve

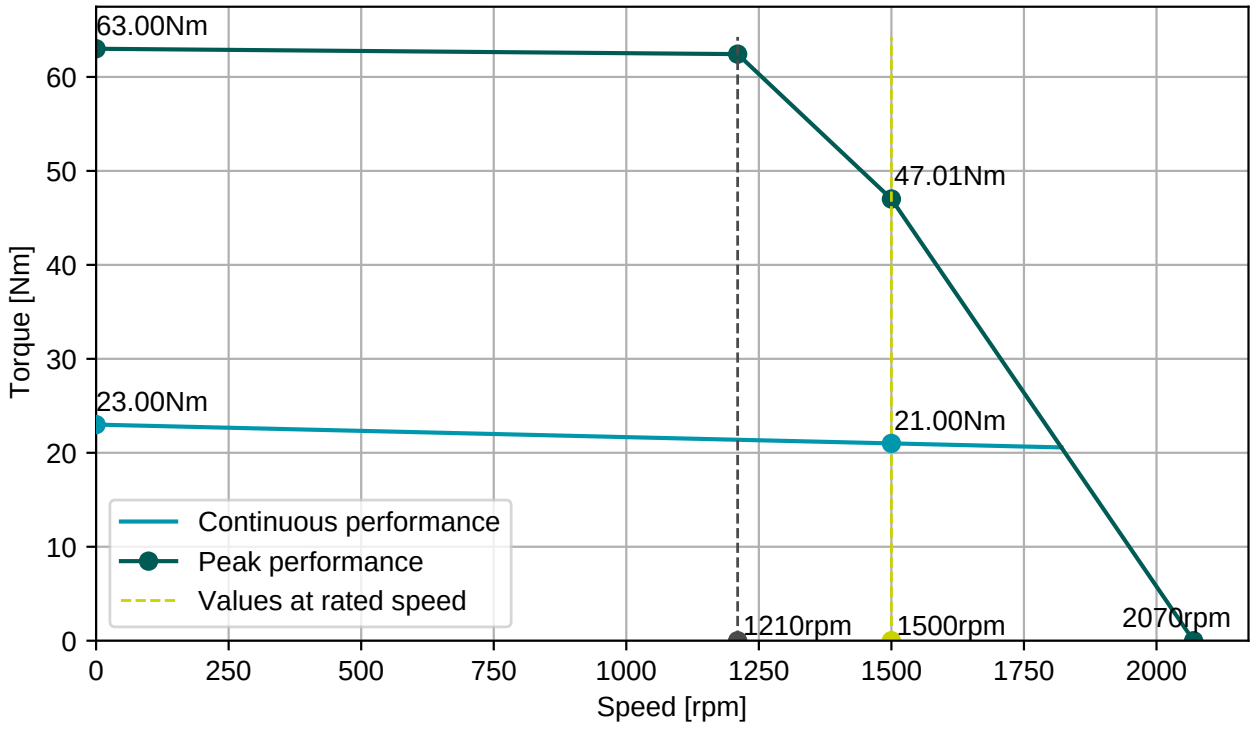

BGC110N00001216000
M23, 8 poles, rotary

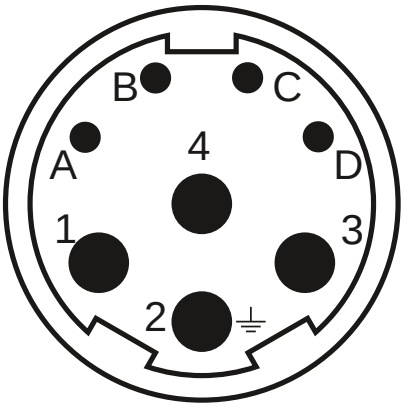

AGC052N00001215000
M23, 12 poles, rotary

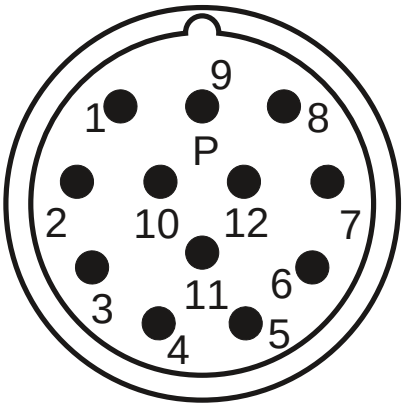

Connector 1 (1)	
1	U
4	V
3	W
2	PE
A	Therm+
B	Therm-
C	Brake+
D	Brake-

Connector 2 (2)	
4	S1
8	S3
3	S4
7	S2
5	R2
9	R1

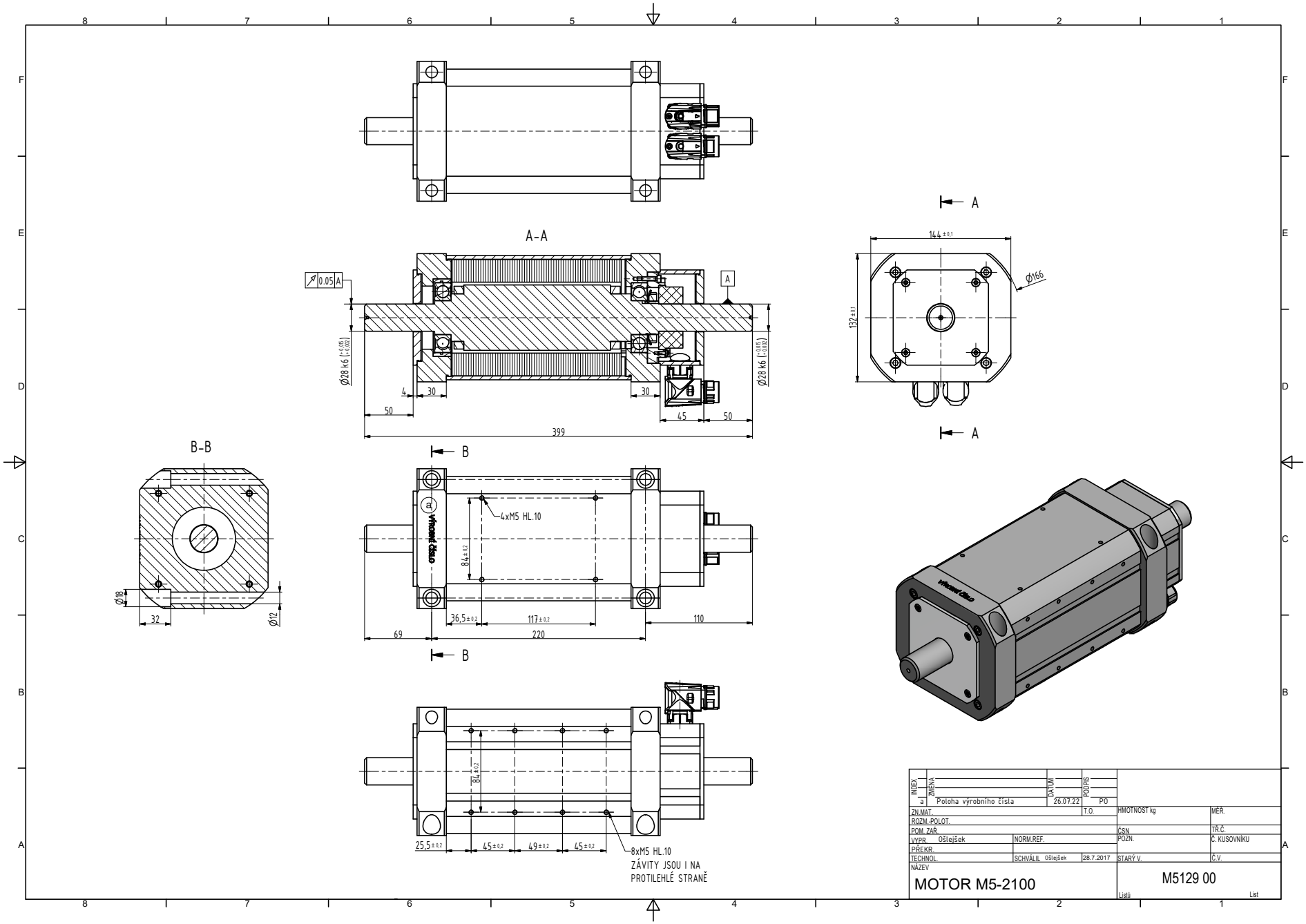
A-A
B-B
A
B
0.05 A
Ø28 k6 (+0.015 +0.002)
4
30
50
399
45
144 ±0.1
132 ±0.1
Ø166
4xM5 HL.10
84 ±0.2
36,5 ±0.2
117 ±0.2
110
69
220
Ø19
32
Ø12
25,5 ±0.2
45 ±0.2
49 ±0.2
8xM5 HL.10
ZÁVITY JSOU I NA
PROTILEHLÉ STRANĚ
INDEX
ZMĚNA
DATUM
PODPIS
a
Poloha výrobního čísla
26.07.22
PO
ZN.MAT.
T.O.
ROZM.-POLOT.
POM. ZAŘ.
VYPR. Ošlejšek
NORM.REF.
PŘEKR.
TECHNOL.
SCHVÁLIL Ošlejšek
28.7.2017
HMOTNOST kg
MĚŘ.
ČSN
TŘ.Č.
POZN.
Č. KUSOVNÍKU
STARÝ V.
Č.V.
NÁZEV
MOTOR M5-2100
M5129 00
Listů
List