Engineering data (WIN -100034)		
DC bus voltage	320	V DC
Nominal AC voltage	200	V AC (rms)
Rated voltage	167	V AC (rms)
Rated power	147	W
Rated speed	20000	rpm
Rated torque	0.07	Nm
Rated current	0.67	A (rms)
Peak torque	0.8	Nm
Peak current	6.45	A (rms)
Stall torque	0.2	Nm
Stall current	1.5	A (rms)
No load speed	24640	rpm
EMF constant ±10%	8.1	V AC (rms) / 1000rpm
Theoretical torque constant ±10%	0.13	Nm / A (rms)
Torque constant ±10% @ rated load	0.10	Nm / A (rms)
Number of poles	6	
Electrical time constant	0.36	ms
Winding terminal resistance	6.86	Ω
Rotary field terminal inductance	2.44	mH

Customs info	
HS Code	85015100

Mechanical data (setting 5)		
Max mechanical speed	20000	rpm
Mech. time constant	3.97	ms
Thermal time constant	20	min
Rotor inertia	0.06	kgcm²
Protection	IP54	
Color	RAL 9005	
Cooling	Convection	
Motor-only mass	0.7	kg

Sensors	
Temperature	PTC 111-K13 {PTC 111-K13 Reissmann}
Feedback	2-pole resolver size 10

Torque / speed curve

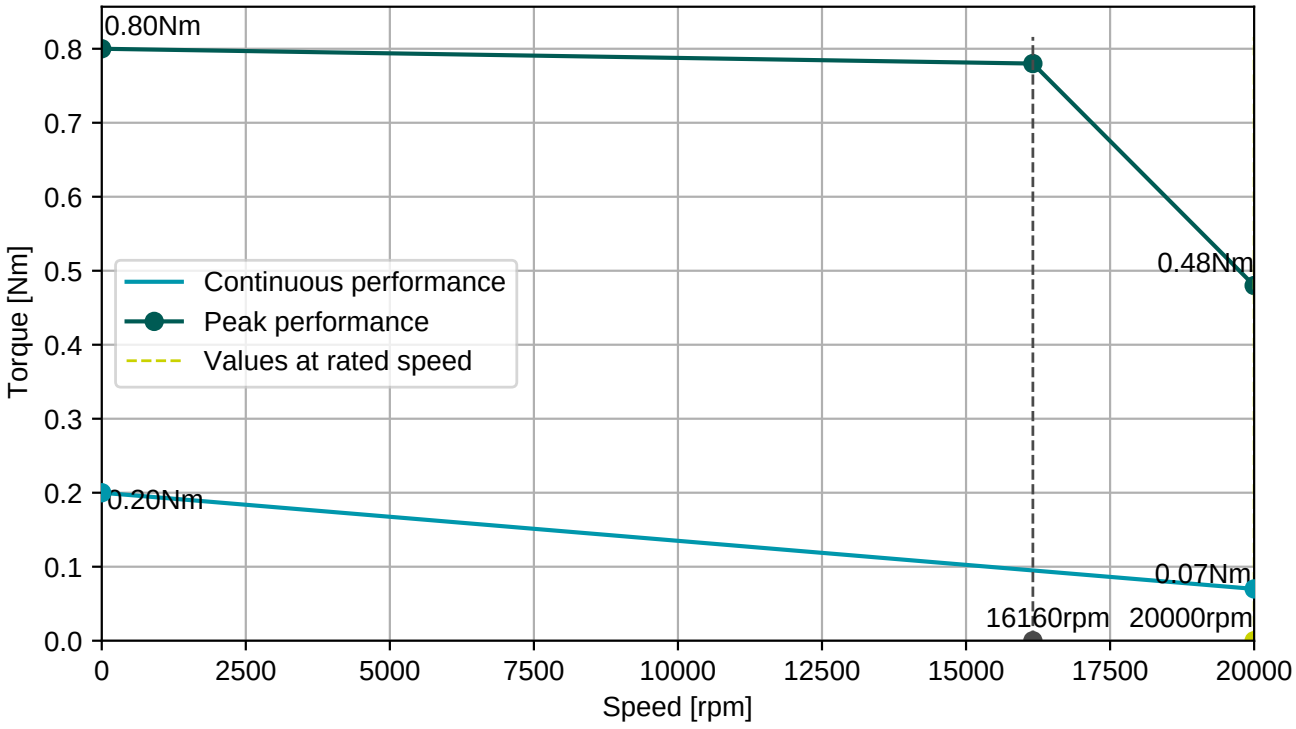

Power cable 4G0,5 (U,V,W,PE), D=6,6±0,2mm

Connector 1 (16)	
1	U
2	V
3	W
4	Brake+
5	Brake-
PE	PE

Numbers printed on the cables

Resolver cable 4x2x0,14mm, D=6,8±0,2mm

Connector 2 (22)	
white	R1
brown	R2
grey	S1
green	S2
pink	S3
yellow	S4
red	Therm+
blue	Therm-

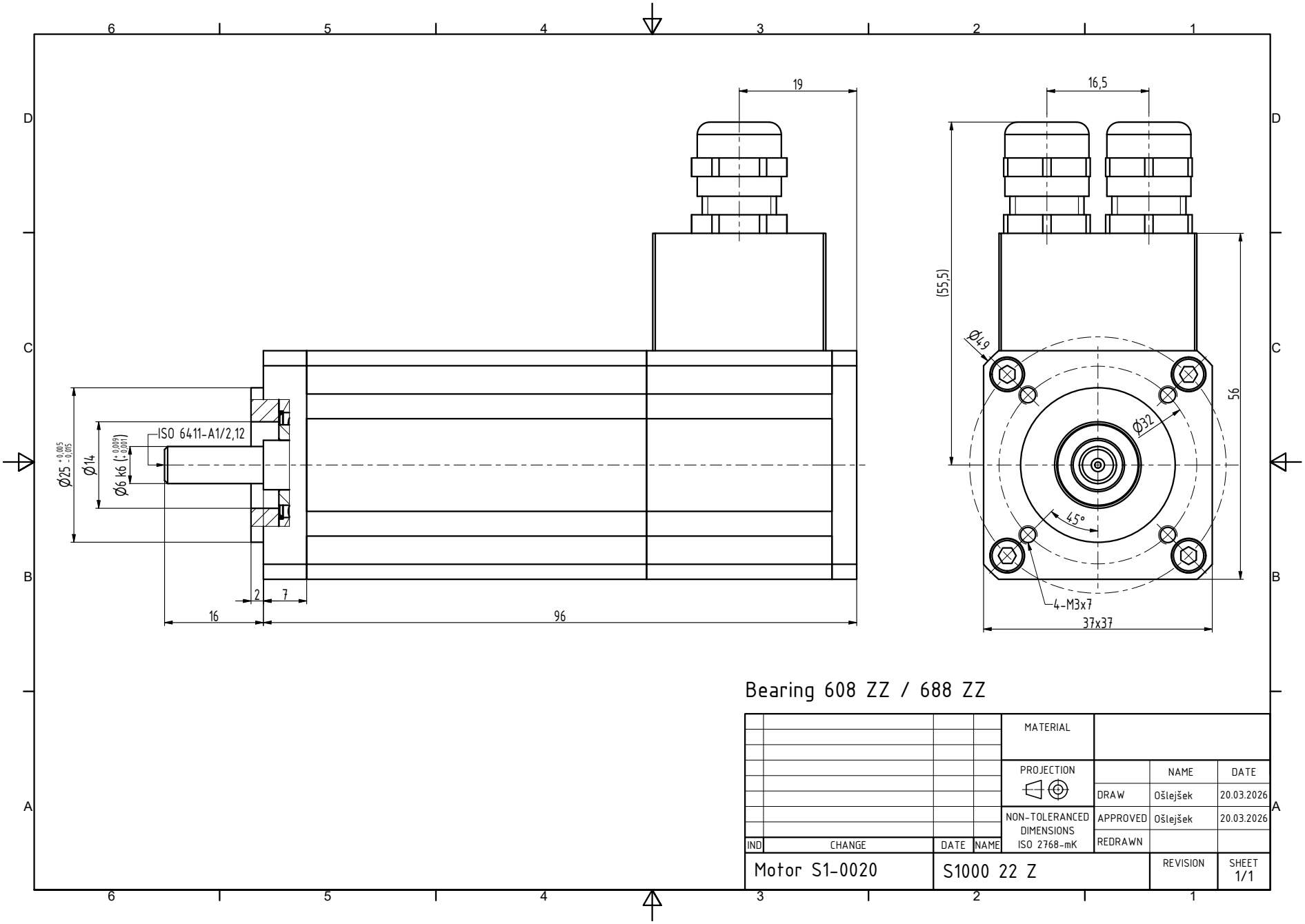

Bearing 608 ZZ / 688 ZZ

				MATERIAL			
				PROJECTION		NAME	DATE
					DRAW	Ošlejšek	20.03.2026
				NON-TOLERANCED DIMENSIONS ISO 2768-mK	APPROVED	Ošlejšek	20.03.2026
					REDRAWN		
IND	CHANGE	DATE	NAME				
Motor S1-0020		S1000 22 Z				REVISION	SHEET 1/1